Ningbo Fenghua Airlead automation co.,ltd.
Add: xikou, Ningbo, China

Email: AIRLEAD@qq.com
Fax:+86-574-88858606
Tel:+86-574-88858606

Website: www.nfpcchina.com
Website: www.airlead.com.cn

OFFICIAL WECHAT

OFFICIAL WhatsApp

To Offer Customized Pneumatic Control Technology
Solutions for Globle Customers

ALDPC

2004

supplier of solenoid valve of drainage system for the usage of Guangzhou Asian cup

2010

Supporting designated supplier of shanghai expo environmental protection recycling system

2016

helped the construction of rail transit in China

2023

We concentrate on the concept of “quality is the first” to offer pneumatic control technology solutions for more than 80 global customers

Introduction of AIRLEAD

AIRLEAD was established in 2003, has been producing pneumatic components for nearly 20 years. We take the lead in passing ISO9001 and CE certificate.
AIRLEAD is the member of Chinese hydraulic and pneumatic seal industrial association. We have 80 employees and more than 1/3 are professional technical personnel.
We are able to design and making pneumatic control components, cylinders, air treatment units. We have the latest CNC machining centers. automatic assembly production line, online detection equipment etc. We are awarded the honorable title of national high–tech enterprise of China. Superior quality and service are our eternal pursuits.

Technological Development & Scientific Management

Our company have a group of technicians who are brilliant in technical and dedicated to work, they are engaged in the research and development of various kinds of new products.

AIRLEAD has many advanced equipment so we could provide our customers with customized products.

Warehouse

Sales team

equipment management

With quick connector direct type solenoid valve

High & low Pressure switchable direct type solenoid valve

Rotary valve

Quick exhaust valve

With storage tank closed rotary valve

Pressure switching valve

Hard ceramic seal for solenoid valve

Iso9001 Certificate（English Version）

Iso9001 Certificate（Chinese version）

MA, CNAS Test Report

CE Certificate

Excellent equipment
Casting high-quality products

AIRLEAD brings the advanced machine equipment from China and abroad and adopts the new concept of intelligent manufacturing “digital factory”. The establishment of the system will provide a systematic solution for the current production and commercial operation. AIRLEAD has establish an overall management system that adapts the flexibility of market economy. Also, AIRLEAD always keep the pace with development of advanced technologies and constant innovation to let the factory grow steadily

Over 80 machining centers are working in the workshop.

产品指南
Product Directory

声明：本公司样图及尺寸数据与实物有可能存在部分差异。 以公司实际产品为准，如有变动，恕不另行通知。

单位换算表/技术资料
(美制及英制单位换算成单位)

质量单位		
1 lb	=453.6	g
1 tonne	=1000	kg
1 ton(imp)	=1016	kg
1 ton(us)	=907.2	kg

长度单位		
1 in	=25.4	mm
1 ft	=0.3048	m
1 micron	$=10^{-3}$	mm

温度单位	
(°F−32)x5/9	=℃
K−273.15	=℃

力矩单位		
1 kgm	=9.807	Nm
1 ft poundal	=0.0421	Nm
1 in lb	=0.113	Nm
1 ft lb	=1.356	Nm

功及能量单位		
1 Nm	=1	J
1 kgm	=9.807	J
1 kw/hr	=3.6	MJ
1 lbft	=1.356	J

面积单位		
1 in^2	=6.45	cm^2
1 ft^2	=0.093	m^2

压力单位		
1 psi	=6.89	Kpa
1 kgf/cm^2	=98.07	kpa
1 bar	=100	kpa
1 bar	=14.5	psi
1 mm mercury	=133.3	pa
1 in mercury	=3.39	kpa
1 Torr	=133.3	pa
1 ft water	=0.0298	bar
1 bar	=33.33	ft water
1 atmosphere (standard)	=101.3	kpa
1 cm water	=97.89	pa
1in water	=248.64	pa

功率单位（功/时间）		
1 Nm/sec	=1	w
1 lbft/sec	=1.356	w
1 kgm/sec	=9.807	w
1 Joule/sec	=1	w
1 H.P(imp)	=745.7	w

体积单位		
1 litre	=0.001	m^3
1 cu.ft.	=0.0283	m^3
1 cu.in.	=16.39	cm^3
1 fuid oz.(imp)	=28.41	mL
1 fuid oz.(us)	=29.57	mL
1 gal(imp)	=4.546	L
1 gal(us)	=3.79	L

力单位		
1 kgf	=9.81	N
1 lbf	=4.45	N
1 kp(kilopound)	=9.81	N
1 poundal	=138.3	mN
1 ton force	=9.964	kM

流量

Cv 值	=水流量(US gal/min)於60℃下，流经差压力1psi之阀门而所得出之流量定值。
Kv值	=水流量(L/min)于20℃下，流经差压力1kgf/cm^2之阀门而所得出之流量定值。
So	=有效截面积(mm^2)
Q	=流量(Nl/min)
S.T.P.	=标准温度及压力(0℃及101.3kpa绝对压力)
M.S.C.	=公制标准情况(15℃及101.3kpa绝对压力)
ANR	=温度:20℃及相对湿度:65%
N.T.P.	=正常温度及压力（20℃及101.3kpa绝对压力）

换算表

1psi = 6.895 kpa = 0.07kg/cm^2= 0.06895 bar = 0.0703 atm

1 standard atmosphere = 14.7 psi = 101.3kpa = 1.01325 bar

1 kg/cm^2 = 98.07 kpa = 14.22 psi = 28.96 ins mercury

1m^3 = 10^6cm^3

1ft lb = 0.13826 kgm = 1.356Nm

1 L = 1000 cm^3 = 1.7598 pint = 10^6mm^3

1 tonne = 1000 kg =0.984 ton = 2204.6 lb

1 cu ft/min =28.3 l/min

1 pa = 1N/m^2

流量计算公式

Q =Cv值×984

=Kv值×1100

Cv =So÷18

接口螺纹代号：

Rc— 内圆锥管螺纹（PT内螺纹）　G — 内、外圆柱管螺纹（BSPP内、外螺纹）

R — 外圆锥管螺纹（PT内螺纹）

气缸理论输出力表(N)
Cylinder theory table output force

气缸理论输出力F(N)

推力:

$$F1=\frac{\pi D^2P}{4}$$

拉力:

$$F2=\frac{\pi (D^2-d^2)P}{4}$$

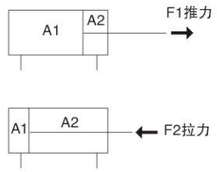

F=气缸理论输出力(N)
F1=气缸推力(N)
F2=气缸拉力(N)
P=空气压力(MPa)
D=气缸缸径(mm)
d=活塞杆直径(mm)
S=受压面积(mm^2)
A1=气缸推出时受压面积(mm^2)
A2=气缸缩回时受力面积(mm^2)

缸径 D(mm)	活塞杆直径 d(mm)	输出力 F(N)	受压面积 (mm^2)	工作压力（MPa）						
				0.2	0.3	0.4	0.5	0.6	0.7	0.8
6	3	F1	28	5.6	8.4	11.2	14	16.8	19.6	22.4
		F2	21	4.2	6.3	8.1	10.5	12.6	14.7	16.8
10	4	F1	79	15.5	23.7	31.6	39.5	47.4	55.3	63.2
		F2	66	13.2	19.8	26.4	33	39.6	46.2	52.8
12	6	F1	113	22.6	33.9	43.2	56.5	67.8	79.1	90.4
		F2	85	17.0	25.5	34.0	42.5	51.0	59.5	68.0
16	6	F1	201	40.2	60.3	80.4	100.5	120.6	140.7	160.8
		F2	172	34.4	51.6	68.8	86	103.2	120.4	137.6
20	8	F1	314	62.8	94.2	125.7	157.1	188.5	220.0	251.0
		F2	264	52.8	79.2	105.6	132.0	158.4	184.8	211.2
25	10	F1	491	98.2	147.3	196.3	245.0	294.0	344.0	393.0
		F2	412	82.4	123.4	164.8	206.0	247.2	288.4	329.6
32	12	F1	803	160.6	240.9	321.2	401.5	481.8	562.1	642.4
		F2	691	138.2	207.3	276.4	345.5	414.6	483.7	552.8
40	14	F1	1257	251.0	377.0	503.0	628.0	754.0	880.0	1010.0
		F2	1103	220.6	330.9	441.2	551.5	661.8	772.1	882.4
40	16	F1	1257	251.0	377.0	503.0	628.0	754.0	880.0	1010.0
		F2	1056	211.0	317.0	422.0	528.0	633.0	799.0	844.0
50	20	F1	1963	393	589	785	982	1178	1374	1571
		F2	1649	330	495	660	825	990	1155	1319
63	20	F1	3120	623	935	1247	1559	1870	2180	2490
		F2	2800	561	841	1121	1402	1680	1962	2240
80	25	F1	5030	1005	1508	2010	2510	3020	3520	4020
		F2	4540	907	1361	1814	2270	2720	3170	3630
100	30	F1	7850	1571	2360	3140	3930	4710	5500	6280
		F2	7150	1429	2140	2860	3570	4290	5000	5720
125	32	F1	12270	2450	3680	4910	6135	7360	8590	9820
		F2	11460	2290	3440	4580	5730	6880	8020	9170
160	40	F1	20100	4020	6030	8040	10050	12060	14070	16080
		F2	18840	3760	5650	7530	9400	11300	13180	15070
200	40	F1	31420	6280	9420	12560	15710	18850	21990	25130
		F2	30140	6020	9040	12050	15070	18080	21090	24110
250	50	F1	49060	9812	14718	19624	24530	29436	34342	39248
		F2	47100	9420	14130	18840	23550	28260	32970	37680
320	63	F1	80384	16077	24115	32154	40192	48230	56269	64307
		F2	77268	15454	23180	30907	38634	46361	54088	61814

251-B

251

351

451

订购码/Ordering Code

1	–	5	–	1	–	B	–	AC220V

系列代码
1系列:G1/8
2系列:G1/4
3系列:G3/8
4系列:G1/2

Series Code
1 Series :G1/8
2 Series :G1/4
3 Series :G3/8
4 Series :G1/2

线圈及位数
3:二位三通
5:二位五通

Coil and Places
3:Two-position Three-way
5:Two-position Five-way

电控方式
1:双位置单电控
2:双位置双电控
3:三位置双电控

Electric control way
1: double position single electronic control
2: double position double electric control
3: three position double electric control

B:Namur 型
B:Namur Type

标准电压
Standard Voltage
DC12V
DC24V
AC24V 50Hz/60Hz
AC110V 50Hz/60Hz
AC220V 50Hz/60Hz
AC380V 50Hz/60Hz

特性/Features

新颖的外型，可靠的寿命，采用进口密封圈，寿命达到二千万次以上(也可提供夹套式结构)。
Novel appearance, reliable life, adopt imported sealing ring, life of more than twenty million times (jacketed type structure) are available

规格/Specifcation

型号 Model	151	251	351	451
位通数/Position and Way NO.	二位五通/ Two-position Five-way	三位五通/ Three-position Five-way	二位五通/ Two-position Five-way	三位五通/ Three-position Five-way
接管口径/Port Size	G1/8	G1/4	G3/8	G1/2
工作压力/Working Pressure	0.15～0.8MPa			
最大耐压力/Max. Pressure Resisance	12MPa			
工作温度/Working Temperature	5～60°C			
电压范围/Voltage Range	±15%~+10%			
耗电量/Power Consumption	AC: 5.5VA DC: 4.8W			
绝缘性及防护等级Insulation & Protection Class	F级. IP65 / F Class. IP 65			
最高动作频率/Max. Frequency	每秒五次 / 5 Cycle / Secretary			
最短励磁时间/Shortest Activate Time	<0.05秒 / <0.05 Second			

151

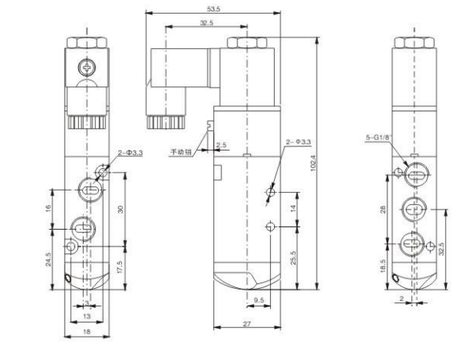

152

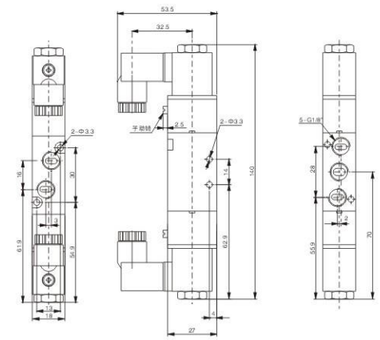

251

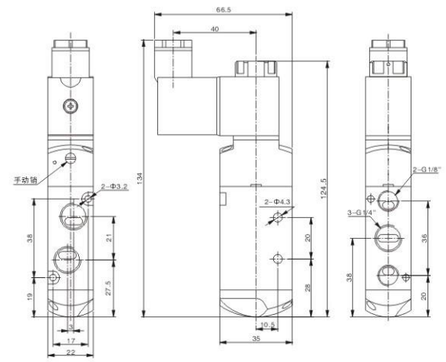

252

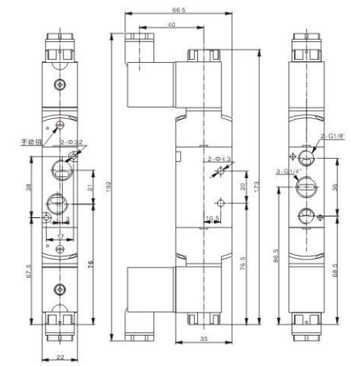

251-B

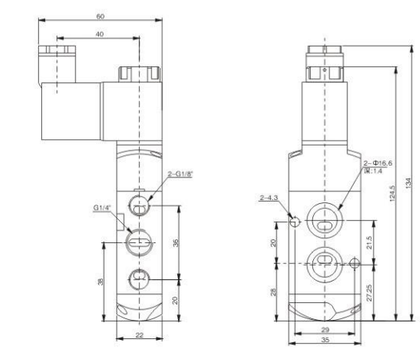

252-B

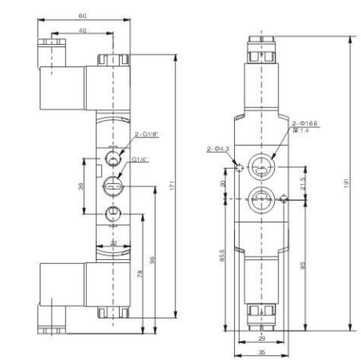

外形尺寸/Overall Dimension

351

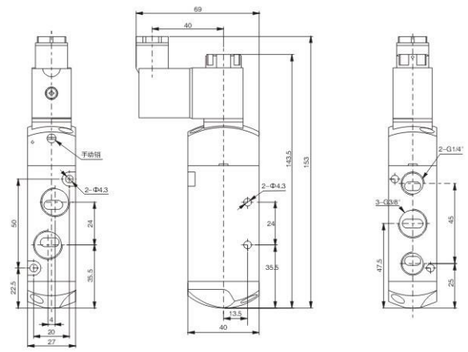

352

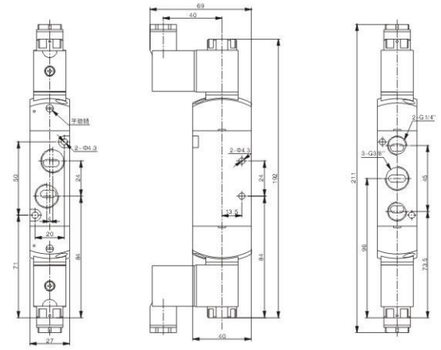

351-B

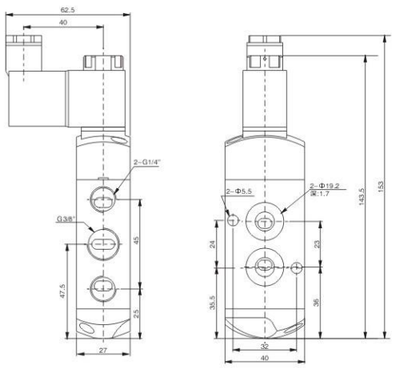

352-B

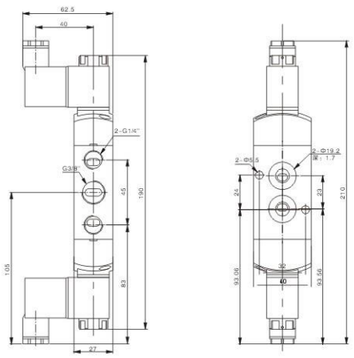

451

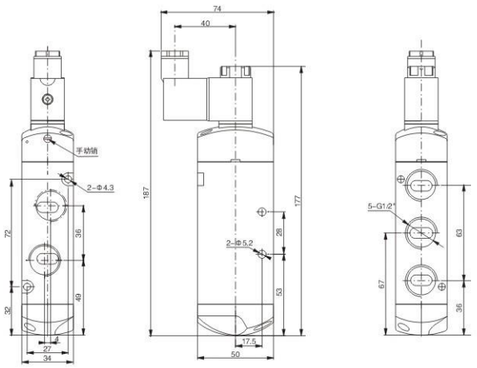

452

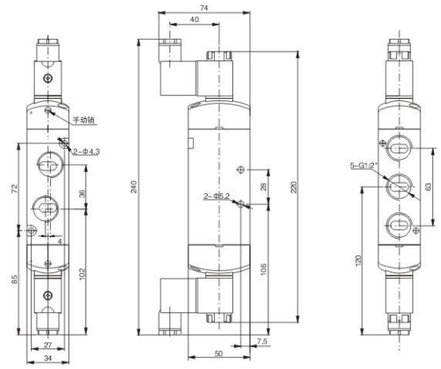

G4V210-08

G4V310-10

订购码/Ordering Code

G – G4V – 3 – 10 – 10 – B – AC220V – W

G — 夹套式 Jacketed type

G4V — 规格代码
4V:二(三)位五通电磁阀
4A:二(三)位五通气控阀
3V:二位三通电磁阀
3A:二位三通气控阀

Specifcation Code
4V:Two (Three)-position Five-way Solenoid Valve
4A:Two (Three)-position Five-way Pneumatic Control Valve
3V:Two-position Three-way Solenoid Valve
3A:Two-position Three-way Pneumatic Control Valve

3 — 系列代码
200系列
300系列

Series Code
200 Series
300 Series

10 — 线圈及位数
10:单头双位置
20:双头双位置
30C:双头三位置封闭型
30E:双头三位置排气型
30P:双头三位置压力型

Coil and Places
10:Single-head Double-position
20:Double-head Double-position
30C:Double-head Three-position Close Type
30E:Double-head Three-position Exhaust Type
30P:Double-head Three-position Pressure Type

10 — 接管口径
Joint Pipe Bore
08:1/4"
10:3/8"

B — 接管形式及初始状态
空白:管接式
B:二位五通板接式
三位五通板接式
NC:二位三通常闭型
NO:二位三通常开型

Joint Pipe Form and Initial State
Blank:Pipe Connection Type
B:Two-position Five-way Plate Connection Type
Three-position Five-way Plate Connection Type
NC:Two-position Three-way Normal Close Type
NO:Two-position Three-way Normal Open Type

AC220V — 标准电压
Standard Voltage
DC12V
DC24V
AC24V 50Hz/60Hz
AC110V 50Hz/60Hz
AC220V 50Hz/60Hz
AC380V 50Hz/60Hz

W — 接线形式
空白：标准端子式
LD:茶色带灯端子式
LD1:白色带灯端子式
W:引线式

Wiring Form
Blank:standard Connector
LD:Brown with Lighting Connector
LD1:White with Lighting Connector
W: Lead Wire Type

特性/Features

产品夹套式结构，有防尘作用，使用寿命达到三千万次以上。
Product jacketed type structure, have dustproof effect, the service life of more than thirty million times.

规格/Specifcation

型号 Model	G4V210-08	G4V220-08	G4V230C-08	G4V230E-08	G4V230P-08	G4V310-10	G4V320-10	G4V330C-10	G4V330E-10	G4V330P-10
	G4A210-08	G4A220-08	G4A230C-08	G4A230E-08	G4A230P-08	G4A310-10	G4A320-10	G4A330C-10	G4A330E-10	G4A330P-10
位通数/Position and Way NO.	二位五通/Two-position Five-way		三位五通/Three-position Five-way			二位五通/Two-position Five-way		三位五通/Three-position Five-way		
有效截面积/Effective Sectional Area	25mm²(CV=1.40)		18mm²(CV=1.00)			30mm²(CV=1.68)		18mm²(CV=1.00)		

型号 Model	3V210-08	3V220-08	3A210-08	3A220-08	3V310-10	3V320-10	3A310-10	3A320-10
位通数/Position and Way NO.	二位三通/Two-position Three-way							
有效截面积/Effective Sectional Area	25mm²(CV=1.40)				30mm²(CV=1.68)			
接管口径/Port Size	进气=出气=排气=G1/4" / Air Inlet=Air Outlet=Exhaust=G1/4"				进气=出气=G3/8" 排气=G1/4" / Air Inlet=Air Outlet=G3/8" Exhaust=G1/4"			
工作介质/Working Medium	空气(经40μm滤网过滤) / Air (40Micron Filtered)							
作动方式/Acting Type	内部先导式 / Inner Guide Type							
使用压力/Working Pressure	0.15～0.8MPa							
最大耐压力/Max. Pressure Resisance	1.2MPa							
工作温度/Working Temperature	5～50°C							
电压范围/Voltage Range	±10%							
耗电量/Power Consumption	AC: 5.5VA DC: 4.8W							
绝缘性及防护等级/Insulation & Protection Class	F级. IP65 / F Class. IP 65							
接线形式/Wiring Form	出线式或端子式 / Lead wire or Connector type							
最高动作频率/Max. Frequency	每秒五次 / 5 Cycle / Sec							
最短励磁时间/Shortest Activate Time	0.05秒 / 0.05 Second							

图纸参照后面4V210和4V310。

4V110-06

4V120-06

4A210-08

订购码/Ordering Code

4V | 1 | 10 – 06 | B – AC220V – W

规格代码
4V:二(三)位五通电磁阀
4A:二(三)位五通气控阀
3V:二位三通电磁阀
3A:二位三通气控阀

Specifcation Code
4V:Two (Three)-position Five-way Solenoid Valve
4A:Two (Three)-position Five-way Pneumatic Control Valve
3V:Two-position Three-way Solenoid Valve
3A:Two-position Three-way Pneumatic Control Valve

系列代码
100系列
Series Code
100 Series

线圈及位数
10:单头双位置
20:双头双位置
30C:双头三位置封闭型
30E:双头三位置排气型
30P:双头三位置压力型

Coil and Places
10:Single-head Double-position
20:Double-head Double-position
30C:Double-head Three-position Close Type
30E:Double-head Three-position Exhaust Type
30P:Double-head Three-position Pressure Type

接管口径
Joint Pipe Bore
M5: M5x0.8
06: 1/8"

接管形式及初始状态
空白:管接式
B:二位五通板接式
三位五通板接式
NC:二位三通常闭型
NO:二位三通常开型

Joint Pipe Form and Initial State
Blank:Pipe Connection Type
B:Two-position Five-way Plate Connection Type
Three-position Five-way Plate Connection Type
NC:Two-position Three-way Normal Close Type
NO:Two-position Three-way Normal Open Type

标准电压
Standard Voltage
DC12V
DC24V
AC24V 50Hz/60Hz
AC110V 50Hz/60Hz
AC220V 50Hz/60Hz
AC380V 50Hz/60Hz

接线形式
空白：标准端子式
LD:茶色带灯端子式
LD1:白色带灯端子式
W:引线式

Wiring Form
Blank:standard Connector
LD:Brown with Lighting Connector
LD1:White with Lighting Connector
W: Lead Wire Type

规格/Specifcation

型 号 Model	4V110-M5	4V120-M5	4V130C-M5	4V130E-M5	4V130P-M5	4V110-06	4V120-06	4V130C-06	4V130E-06	4V130P-06
	4A110-M5	4A120-M5	4A130C-M5	4A130E-M5	4A130P-M5	4A110-06	4A120-06	4A130C-06	4A130E-06	4A130P-06
位通数/Position and Way NO.	二位五通/Two-position Five-way		三位五通/Three-position Five-way			二位五通/Two-position Five-way		三位五通/Three-position Five-way		
有效截面积/Effective Sectional Area	10mm²(CV=0.56)		7mm²(CV=0.40)			12mm²(CV=0.67)		9mm²(CV=0.5)		

型 号 Model	3V110-M5	3V120-M5	3A110-M5	3A120-M5	3V110-06	3V120-06	3A110-06	3A120-06
位通数/Position and Way NO.	二位三通/Two-position Three-way				二位三通/Two-position Three-way			
有效截面积/Effective Sectional Area	10mm²(CV=0.56)				12mm²(CV=0.67)			
接管口径/Port Size	进气=出气=排气=M5×0.8" /Air Inlet=Air Outlet=Exhaust=M5×0.8"				进气=出气=排气=G1/8 /Air Inlet=Air Outlet=Exhaust=G1/8			
工作介质/Working Medium	空气 (经40μm滤网过滤) / Air (40Micron Filtered)							
作动方式/Acting Type	内部先导式 / Inner Guide Type							
使用压力/Working Pressure	0.15～0.8MPa							
最大耐压力/Max. Pressure Resisance	1.2MPa							
工作温度/Working Temperature	5～50°C							
电压范围/Voltage Range	±10%							
耗电量/Power Consumption	AC: 2.8VA DC: 2.8W							
绝缘性及防护等级/Insulation & Protection Class	F级. IP65 / F Class. IP 65							
接线形式/Wiring Form	出线式或端子式 / Lead wire or Connector type							
最高动作频率/Max. Frequency	每秒五次 / 5 Cycle / Secretary							
最短励磁时间/Shortest Activate Time	0.05秒 / 0.05 Second							

外形尺寸/Overall Dimension

4V110-M5

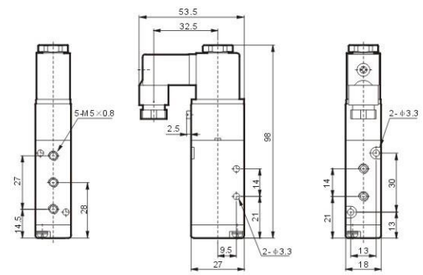

4V110-06

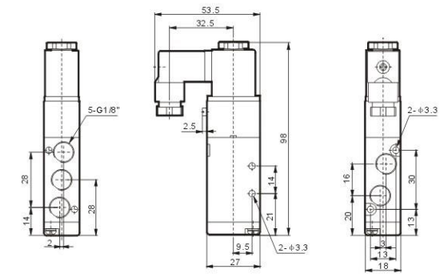

4V120-M5

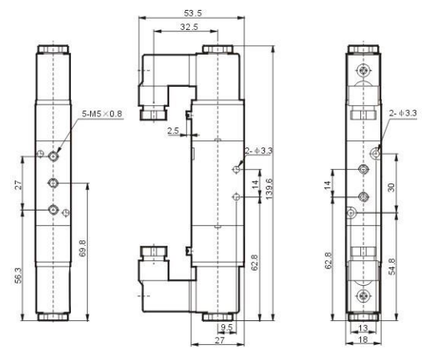

4V120-06

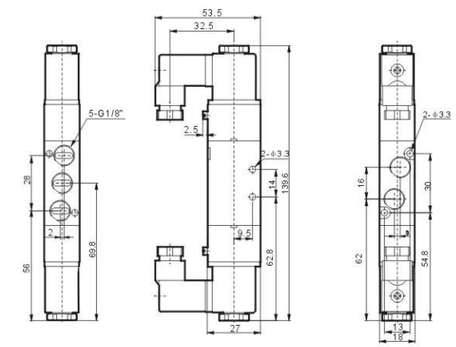

4V130-M5

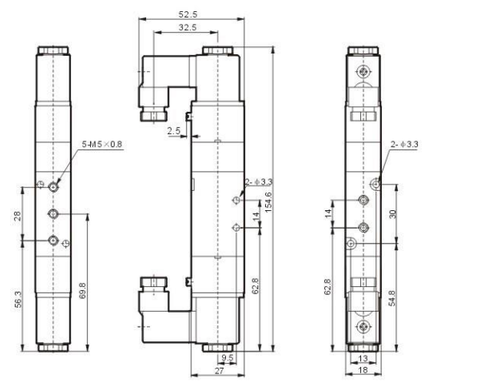

4V130-06

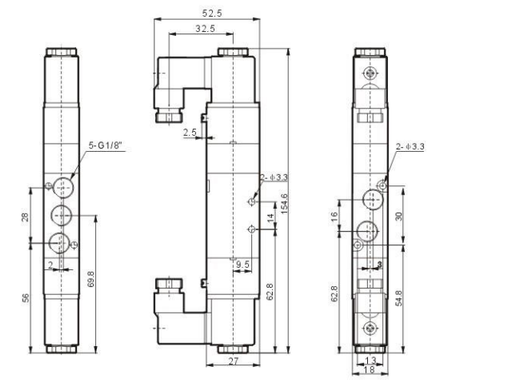

外形尺寸/Overall Dimension

4A110–M5

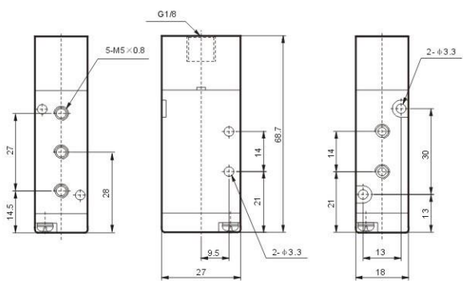

4A110–06

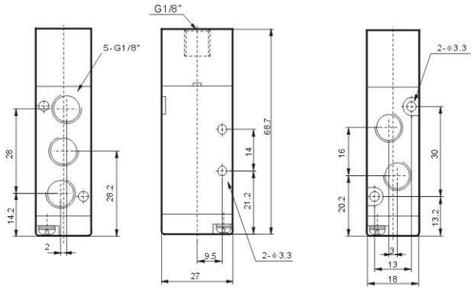

4A120–M5

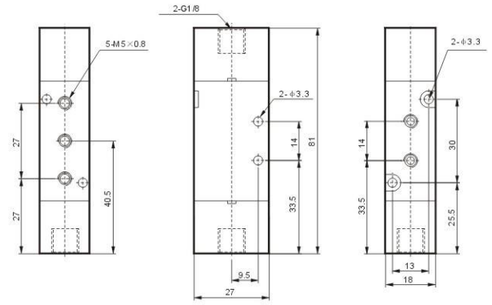

4A120–06

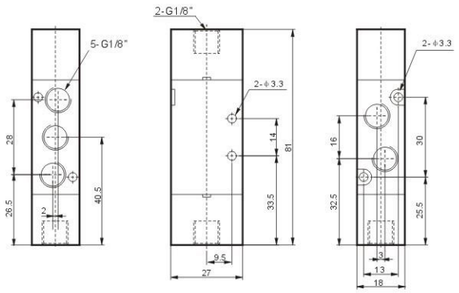

4A130–M5

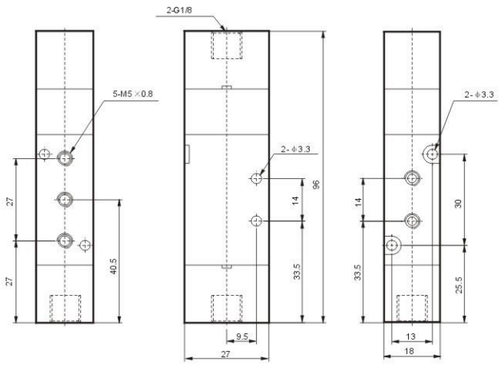

4A130–06

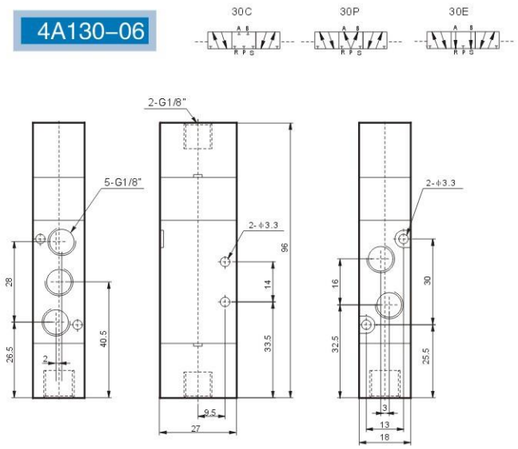

4V100 Series Solenoid Valve,
Pneumatic Control Valve

外形尺寸/Overall Dimension

3V110–M5

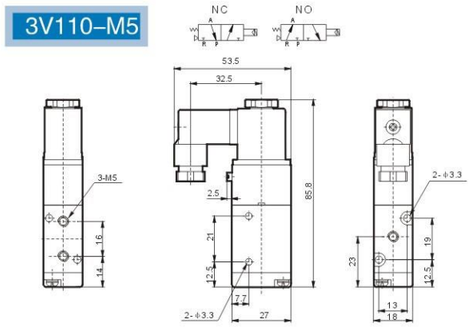

3V110–06

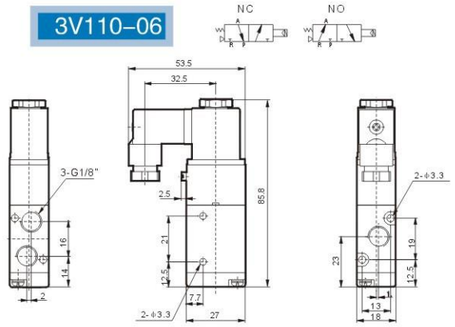

3V120–M5

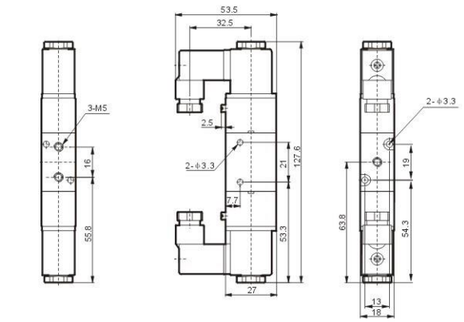

3V120–06

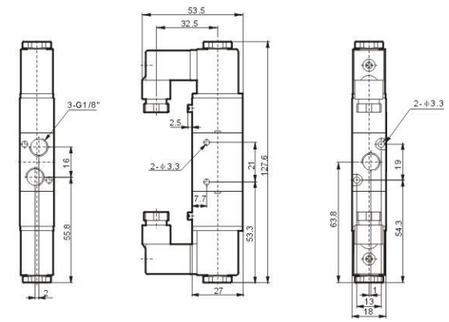

3A110–M5

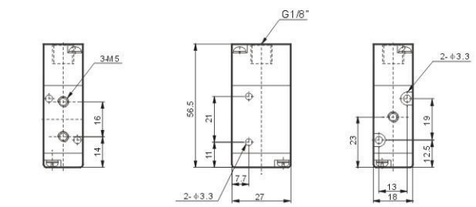

3A110–06

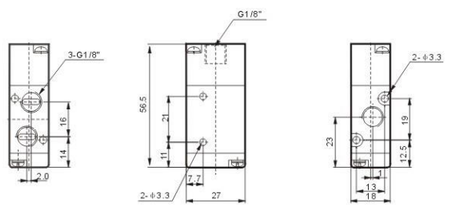

3A120–M5

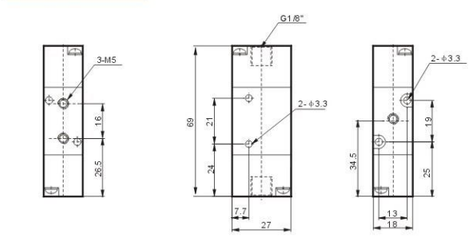

3A120–06

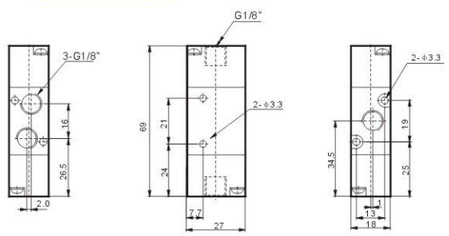

4V210-08

4V230C-08

4A220-08

4M210-08

订购码/Ordering Code

4V 2 10 - 08 B - AC220V - W

规格代码
4V:二(三)位五通电磁阀
4A:二(三)位五通气控阀
3V:二位三通电磁阀
3A:二位三通气控阀

Specifcation Code
4V:Two (Three)-position Five-way Solenoid Valve
4A:Two (Three)-position Five-way Pneumatic Control Valve
3V:Two-position Three-way Solenoid Valve
3A:Two-position Three-way Pneumatic Control Valve

系列代码
200系列
Series Code
200 Series

线圈及位数
10:单头双位置
20:双头双位置
30C:双头三位置封闭型
30E:双头三位置排气型
30P:双头三位置压力型

Coil and Places
10:Single-head Double-position
20:Double-head Double-position
30C:Double-head Three-position Close Type
30E:Double-head Three-position Exhaust Type
30P:Double-head Three-position Pressure Type

接管口径
Joint Pipe Bore
06:1/8"
08:1/4"

接管形式及初始状态
空白:管接式
B:二位五通板接式
三位五通板接式
NC:二位三通常闭型
NO:二位三通常开型

Joint Pipe Form and Initial State
Blank:Pipe Connection Type
B:Two-position Five-way Plate Connection Type
Three-position Five-way Plate Connection Type
NC:Two-position Three-way Normal Close Type
NO:Two-position Three-way Normal Open Type

标准电压
Standard Voltage
DC12V
DC24V
AC24V 50Hz/60Hz
AC110V 50Hz/60Hz
AC220V 50Hz/60Hz
AC380V 50Hz/60Hz

接线形式
空白：标准端子式
LD:茶色带灯端子式
LD1:白色带灯端子式
W:引线式

Wiring Form
Blank:standard Connector
LD:Brown with Lighting Connector
LD1:White with Lighting Connector
W: Lead Wire Type

规格/Specifcation

型号 Model	4V210-06	4V220-06	4V230C-06	4V230E-06	4V230P-06	4V210-08	4V220-08	4V230C-08	4V230E-08	4V230P-08
	4A210-06	4A220-06	4A230C-06	4A230E-06	4A230P-06	4A210-08	4A220-08	4A230C-08	4A230E-08	4A230P-08
位通数/Position and Way NO.	二位五通/Two-position Five-way		三位五通/Three-position Five-way			二位五通/Two-position Five-way		三位五通/Three-position Five-way		
有效截面积/Effective Sectional Area	14mm²(CV=0.78)		12mm²(CV=0.67)			16mm²(CV=0.89)		12mm²(CV=0.67)		

型号 Model	3V210-06	3V220-06	3A210-06	3A220-06	3V210-08	3V220-08	3A210-08	3A220-08
位通数/Position and Way NO.	二位三通/Two-position Three-way							
有效截面积Effective Sectional Area	14mm²(CV=0.78)				16mm²(CV=0.89)			
接管口径Port Size	进气=出气=排气=G1/8" /Air Inlet=Air Outlet=Exhaust=G1/8"				进气=出气=G1/4" 排气=G1/8" / Air Inlet=Air Outlet=G1/4" Exhaust=G1/8"			
工作介质Working Medium	空气 (经40μm滤网过滤) / Air (40Micron Filtered)							
作动方式Acting Type	内部先导式 / Inner Guide Type							
使用压力Working Pressure	0.15~0.8MPa							
最大耐压力Max. Pressure Resisance	1.2MPa							
工作温度Working Temperature	5~50°C							
电压范围Voltage Range	±10%							
耗电量Power Consumption	AC: 5.5VA DC: 4.8W							
绝缘性及防护等级 Insulation & Protection Class	F级. IP65 / F Class. IP 65							
接线形式Wiring Form	出线式或端子式 / Lead wire or Connector type							
最高动作频率Max. Frequency	每秒五次 / 5 Cycle / Sec							
最短励磁时间Shortest Activate Time	0.05秒 / 0.05 Second							

外形尺寸/Overall Dimension

4V210-06
G4V210-06

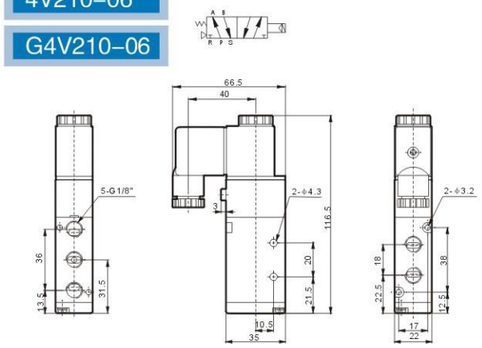

4V210-08
G4V210-08

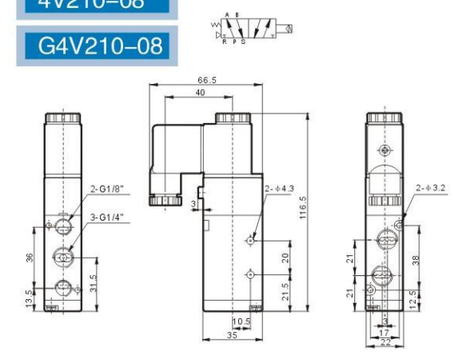

4V220-06

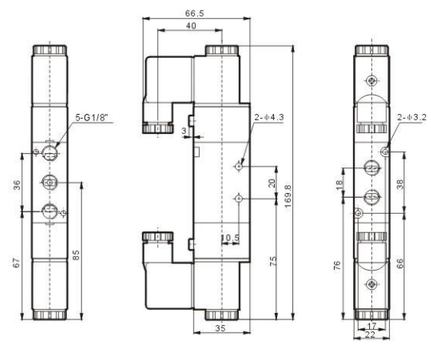

4V220-08

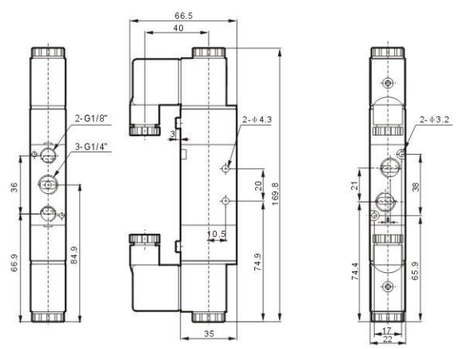

4V230-06

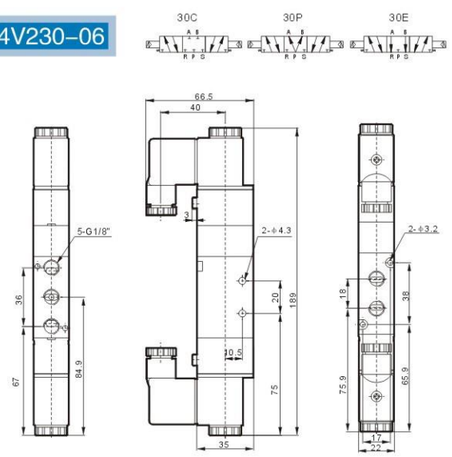

4V230-08

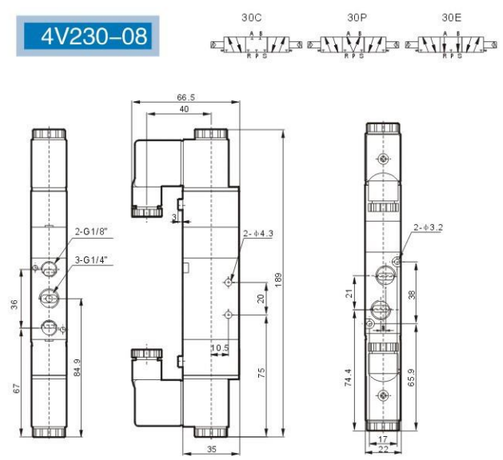

外形尺寸/Overall Dimension

4V210-06B

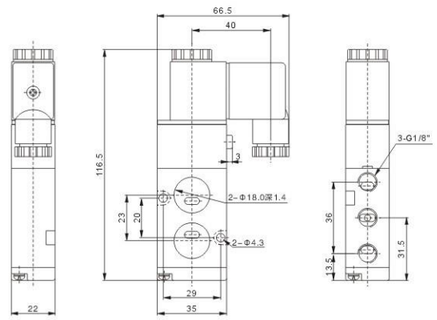

4V210-08B

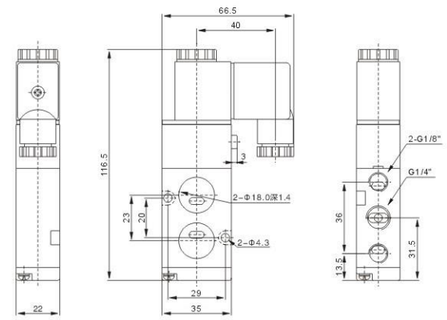

4V220-06B

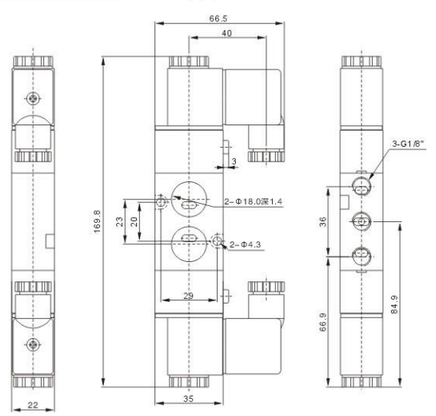

4V220-08B

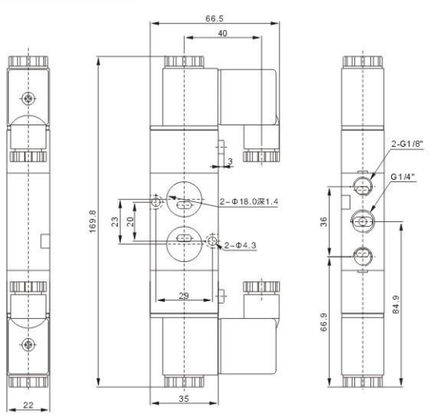

4V230-06B

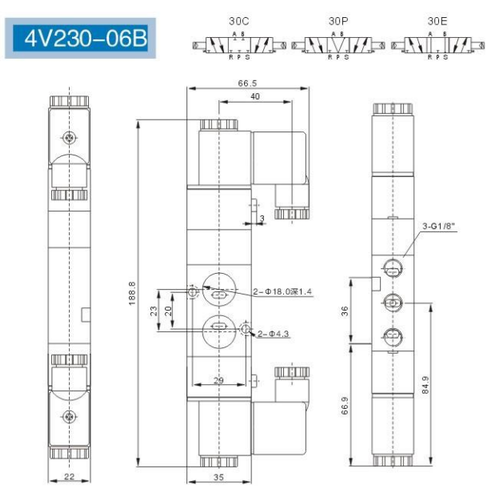

4V230-08B

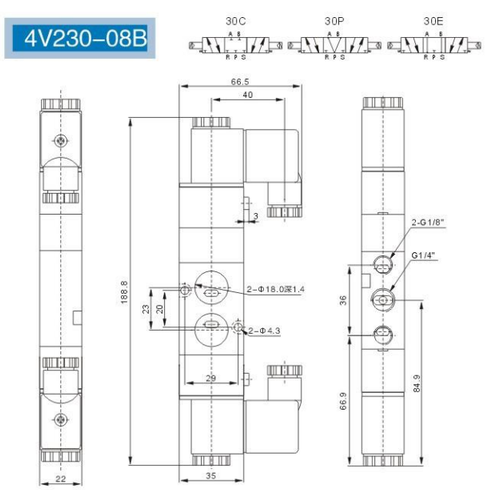

外形尺寸/Overall Dimension

4A210-06

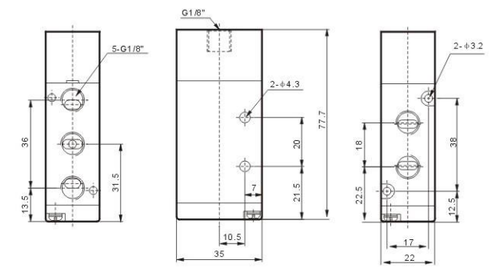

4A210-08

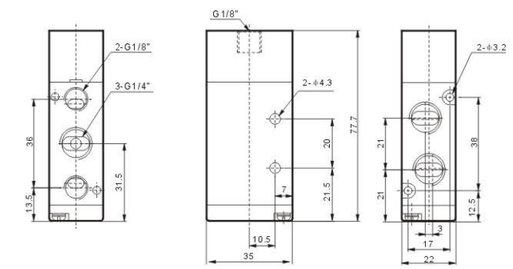

4A220-06

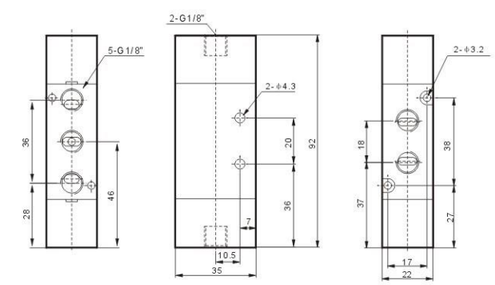

4A220-08

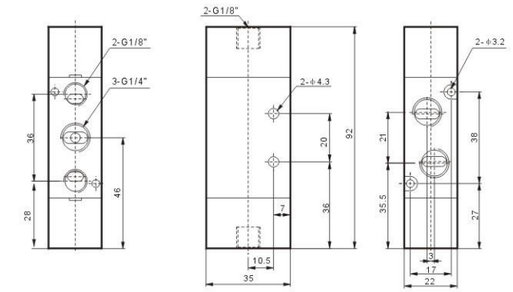

4A230-06

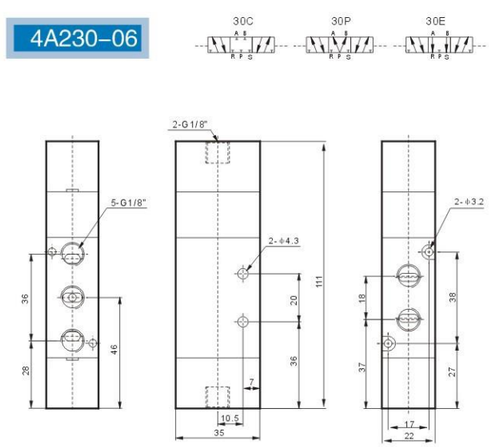

4A230-08

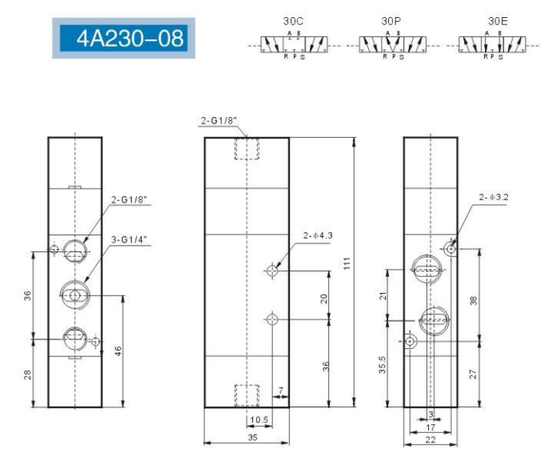

外形尺寸/Overall Dimension

3V210-06

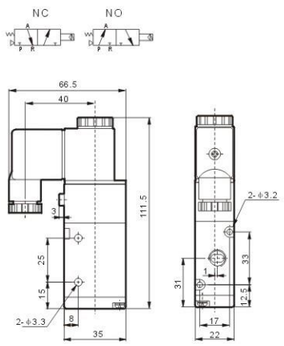

3V210-08

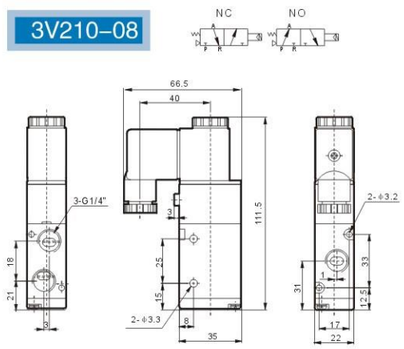

3V220-06

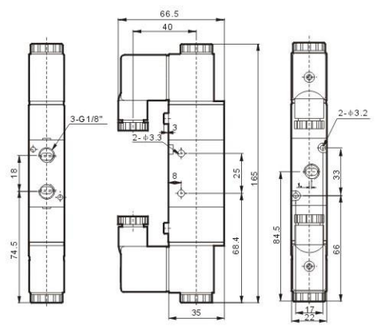

3V220-08

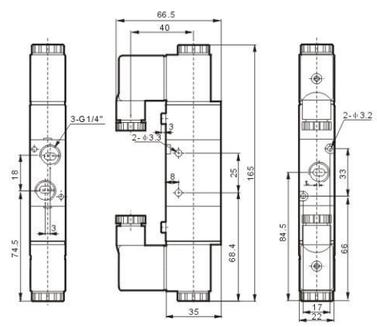

3A210-06

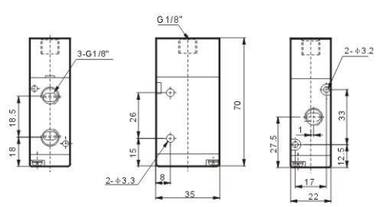

3A210-08

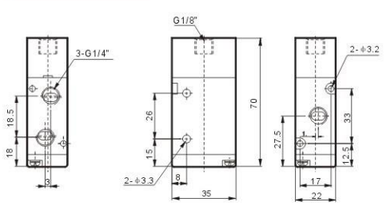

3A220-06

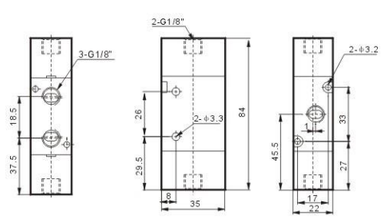

3A220-08

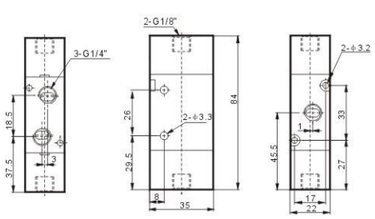

4V310-10

4V330C-10

4A310-10

4M310-10B

订购码/Ordering Code

4V 3 10 – 10 B – AC220V – W

规格代码
4V:二(三)位五通电磁阀
4A:二(三)位五通气控阀
3V:二位三通电磁阀
3A:二位三通气控阀

Specifcation Code
4V:Two (Three)-position Five-way Solenoid Valve
4A:Two (Three)-position Five-way Pneumatic Control Valve
3V:Two-position Three-way Solenoid Valve
3A:Two-position Three-way Pneumatic Control Valve

系列代码
300系列

Series Code
300 Series

线圈及位数
10:单头双位置
20:双头双位置
30C:双头三位置封闭型
30E:双头三位置排气型
30P:双头三位置压力型

Coil and Places
10:Single-head Double-position
20:Double-head Double-position
30C:Double-head Three-position Close Type
30E:Double-head Three-position Exhaust Type
30P:Double-head Three-position Pressure Type

接管口径
Joint Pipe Bore
08:1/4"
10:3/8"

接管形式及初始状态
空白:管接式
B:二位五通板接式
三位五通板接式
NC:二位三通常闭型
NO:二位三通常开型

Joint Pipe Form and Initial State
Blank:Pipe Connection Type
B:Two-position Five-way Plate Connection Type
Three-position Five-way Plate Connection Type
NC:Two-position Three-way Nomal Close Type
NO:Two-position Three-way Nomal Open Type

标准电压
Standard Voltage
DC12V
DC24V
AC24V 50Hz/60Hz
AC110V 50Hz/60Hz
AC220V 50Hz/60Hz
AC380V 50Hz/60Hz

接线形式
空白：标准端子式
LD:茶色带灯端子式
LD1:白色带灯端子式
W:引线式

Wiring Form
Blank:standard Connector
LD:Brown with Lighting Connector
LD1:White with Lighting Connector
W: Lead Wire Type

规格/Specifcation

型号 Model	4V310-08	4V320-08	4V330C-08	4V330E-08	4V330P-08	4V310-10	4V320-10	4V330C-10	4V330E-10	4V330P-10
	4A310-08	4A320-08	4A330C-08	4A330E-08	4A330P-08	4A310-10	4A320-10	4A330C-10	4A330E-10	4A330P-10
位通数/Position and Way NO.	二位五通/Two-position Five-way		三位五通/Three-position Five-way			二位五通/Two-position Five-way		三位五通/Three-position Five-way		
有效截面积/Effective Sectional Area	25mm²(CV=1.40)		18mm²(CV=1.00)			30mm²(CV=1.68)		18mm²(CV=1.00)		

型号 Model	3V310-08	3V320-08	3A310-08	3A320-08	3V310-10	3V320-10	3A310-10	3A320-10
位通数/Position and Way NO.	二位三通/Two-position Three-way							
有效截面积/Effective Sectional Area	25mm²(CV=1.40)				30mm²(CV=1.68)			
接管口径/Port Size	进气=出气=排气=G1/4" / Air Inlet=Air Outlet=Exhaust=G1/4"				进气=出气=G3/8" 排气=G1/4" / Air Inlet=Air Outlet=G3/8" Exhaust=G1/4"			
工作介质/Working Medium	空气(经40μm滤网过滤) / Air (40Micron Filtered)							
作动方式/Acting Type	内部先导式 / Inner Guide Type							
使用压力/Working Pressure	0.15～0.8MPa							
最大耐压力/Max. Pressure Resisance	1.2MPa							
工作温度/Working Temperature	5～50°C							
电压范围/Voltage Range	±10%							
耗电量/Power Consumption	AC: 5.5VA DC: 4.8W							
绝缘性及防护等级/Insulation & Protection Class	F级. IP65 / F Class. IP 65							
接线形式/Wiring Form	出线式或端子式 / Lead wire or Connector type							
最高动作频率/Max. Frequency	每秒五次 / 5 Cycle / Sec							
最短励磁时间/Shortest Activate Time	0.05秒 / 0.05 Second							

外形尺寸/Overall Dimension

G4V310-08
4V310-08

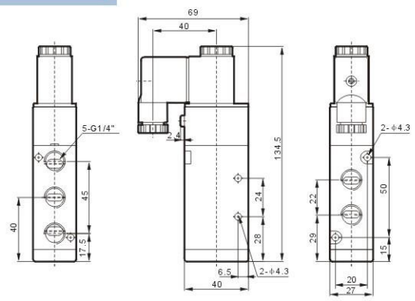

G4V310-10
4V310-10

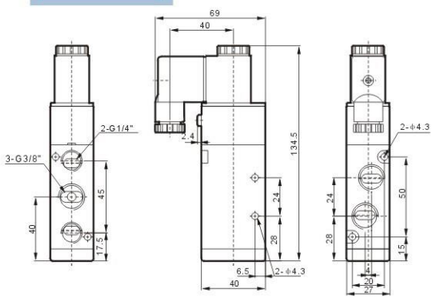

4V320-08

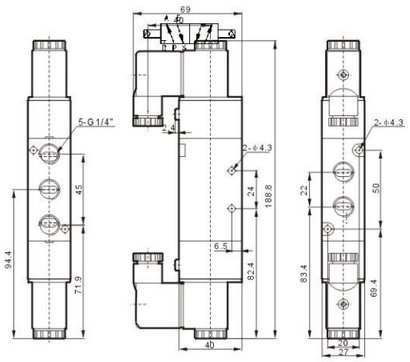

4V320-10

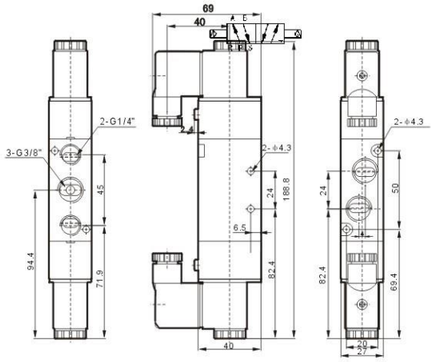

4V330-08

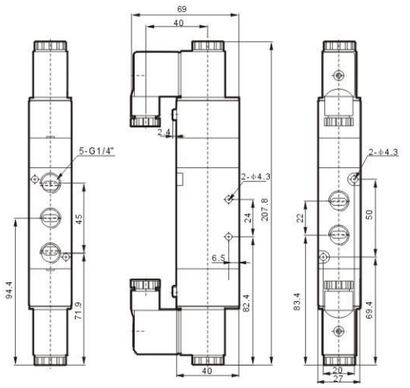

4V330-10

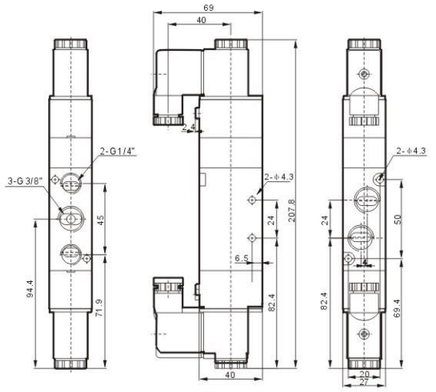

4V300 Series Solenoid Valve,
Pneumatic Control Valve

外形尺寸/Overall Dimension

4V310-08B

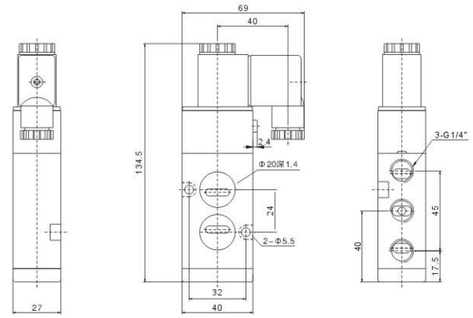

4V310-10B

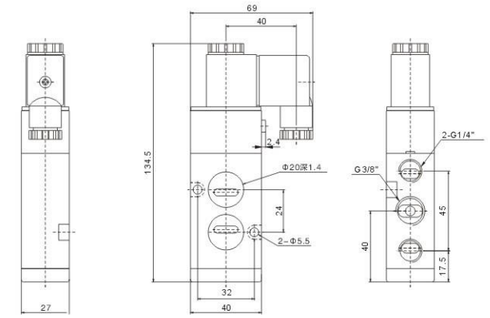

4V320-08B

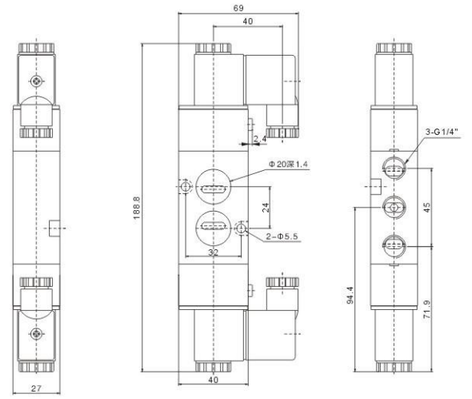

4V320-10B

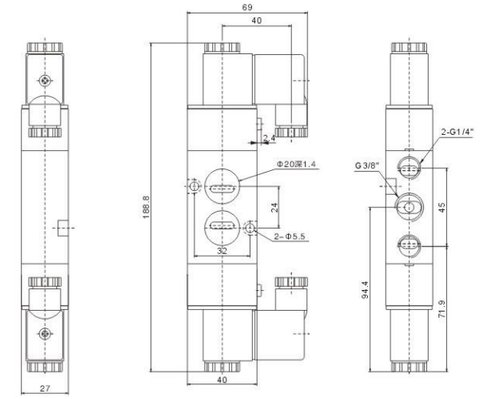

4V330-08B

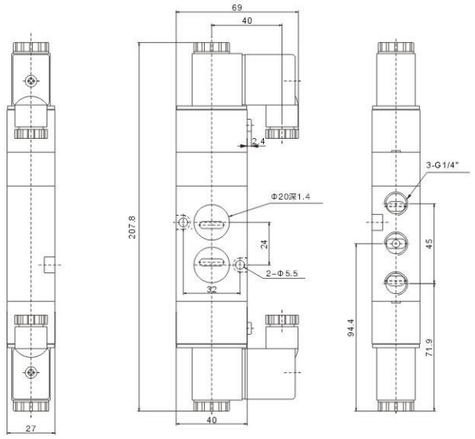

4V330-10B

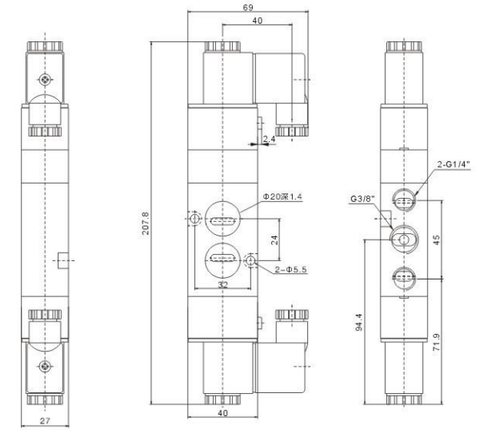

外形尺寸/Overall Dimension

4A310-08

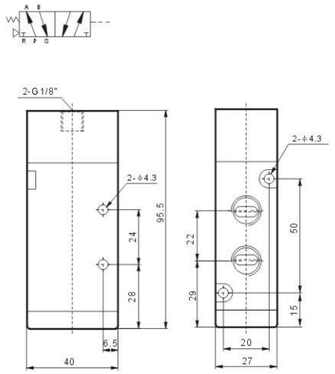

4A310-10

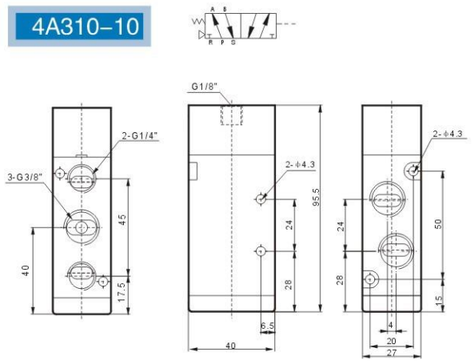

4A320-08

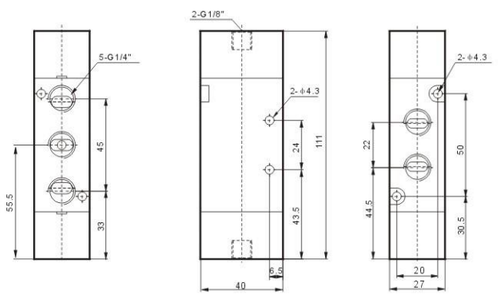

4A320-10

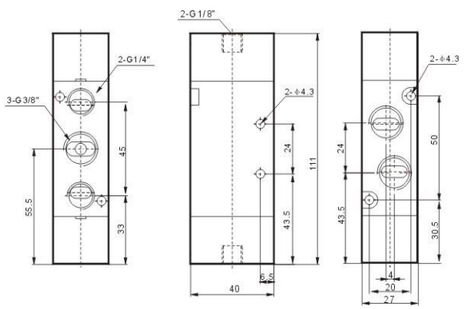

4A330-08

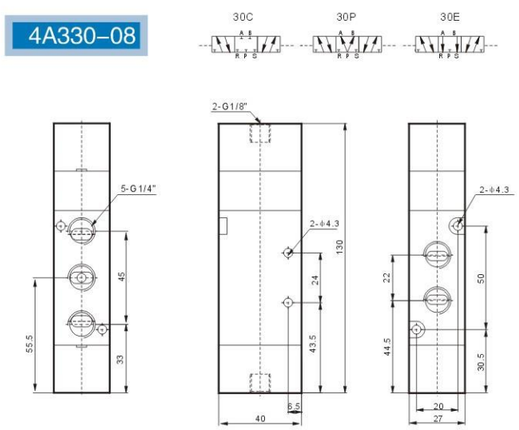

4A330-10

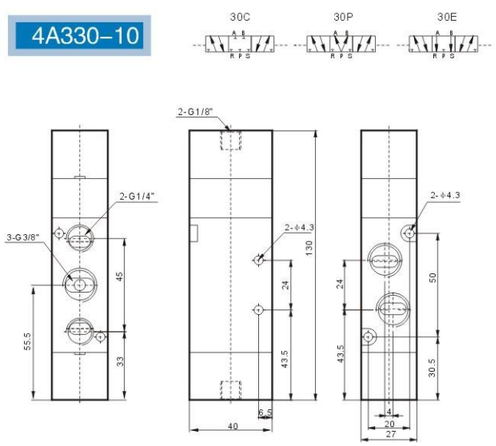

外形尺寸/Overall Dimension

3V310-08

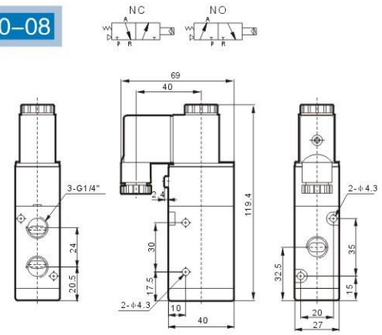

3V310-10

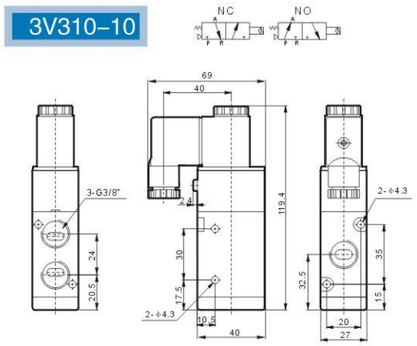

3V320-08

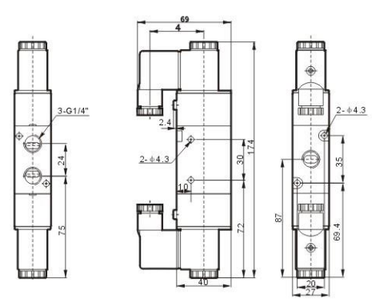

3V320-10

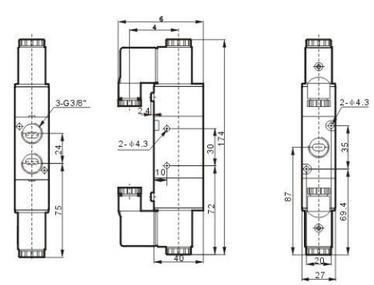

3A310-08

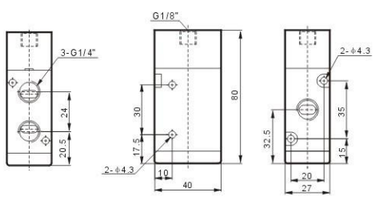

3A310-10

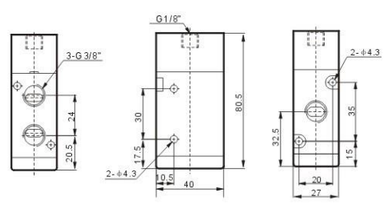

3A320-08

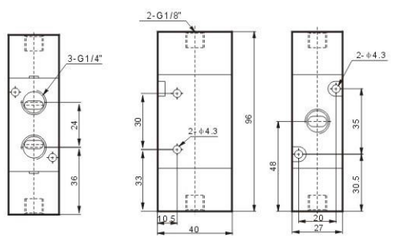

3A320-10

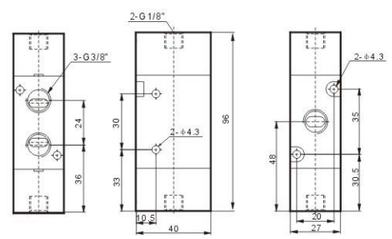

4V410-15

4V420-15

4V430C-15

4A410-15

订购码/Ordering Code

4V	4	10	–	15	B	–	AC220V	–	W

规格代码
4V:二(三)位五通电磁阀
4A:二(三)位五通气控阀
3V:二位三通电磁阀
3A:二位三通气控阀

Specifcation Code
4V:Two (Three)-position Five-way Solenoid Valve
4A:Two (Three)-position Five-way Pneumatic Control Valve
3V:Two-position Three-way Solenoid Valve
3A:Two-position Three-way Pneumatic Control Valve

系列代码
400系列
Series Code
400 Series

线圈及位数
10:单头双位置
20:双头双位置
30C:双头三位置封闭型
30E:双头三位置排气型
30P:双头三位置压力型

Coil and Places
10:Single-head Double-position
20:Double-head Double-position
30C:Double-head Three-position Close Type
30E:Double-head Three-position Exhaust Type
30P:Double-head Three-position Pressure Type

接管口径
Joint Pipe Bore
15:1/2"

接管形式及初始状态
空白:管接式
B:二位五通板接式
三位五通板接式
NC:二位三通常闭型
NO:二位三通常开型

Joint Pipe Form and Initial State
Blank:Pipe Connection Type
B:Two-position Five-way Plate Connection Type
Three-position Five-way Plate Connection Type
NC:Two-position Three-way Normal Close Type
NO:Two-position Three-way Normal Open Type

标准电压
Standard Voltage
DC12V
DC24V
AC24V 50Hz/60Hz
AC110V 50Hz/60Hz
AC220V 50Hz/60Hz
AC380V 50Hz/60Hz

接线形式
空白：标准端子式
LD:茶色带灯端子式
LD1:白色带灯端子式
W:引线式

Wiring Form
Blank:standard Connector
LD:Brown with Lighting Connector
LD1:White with Lighting Connector
W: Lead Wire Type

规格/Specifcation

型 号 Model	4V410-15	4V420-15	4V430C-15	4V430E-15	4V430P-15
	4A410-15	4A420-15	4A430C-15	4A430E-15	4A430P-15
位通数/Position and Way NO.	二位五通/Two-position Five-way		三位五通/Three-position Five-way		
有效截面积/Effective Sectional Area	50mm²(CV=2.79)		30mm²(CV=1.68)		

型 号/Model	3V410-15	3V420-15	3A410-15	3A420-15
位通数/Position and Way NO.	二位三通/Two-position Three-way			
有效截面积/Effective Sectional Area	50mm²(CV=2.79)			
接管口径/Port Size	进气=出气=排气=G1/2" / Air Inlet=Air Outlet=Exhaust=G1/2"			
工作介质/Working Medium	空气 (经40μm滤网过滤) / Air (40Micron Filtered)			
作动方式/Acting Type	内部先导式 / Inner Guide Type			
使用压力/Working Pressure	0.15~0.8MPa			
最大耐压力/Max. Pressure Resisance	1.2MPa			
工作温度/Working Temperature	5~50°C			
电压范围/Voltage Range	±10%			
耗电量/Power Consumption	AC: 5.5VA DC: 4.8W			
绝缘性及防护等级/ Insulation&ProtectionClass	F级. IP65 / F Class. IP 65			
接线形式/Wiring Form	出线式或端子式 / Lead wire or Connector type			
最高动作频率/Max. Frequency	每秒五次 / 5 Cycle / Sec			
最短励磁时间/Shortest Activate Time	0.05秒 / 0.05 Second			

外形尺寸/Overall Dimension

4V410-15

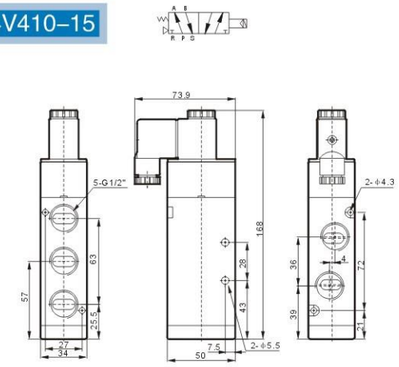

4V420-15
4V430-15

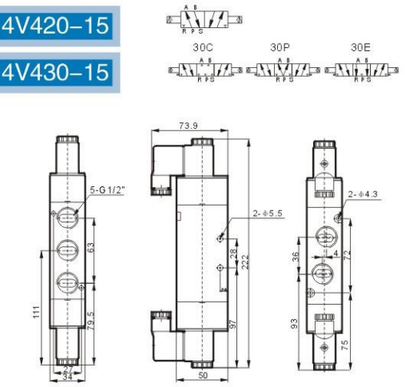

4A410-15

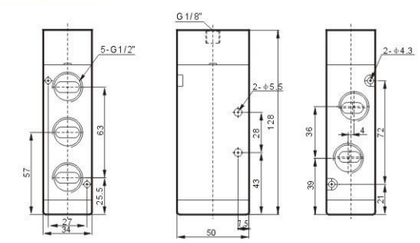

4A420-15
4A430-15

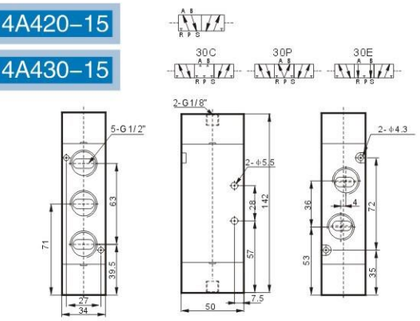

3V410-15

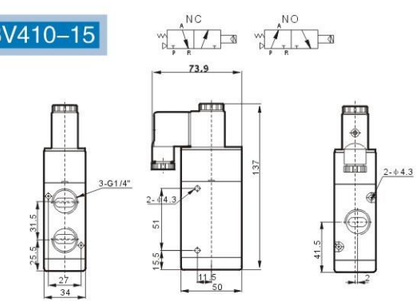

3V420-15

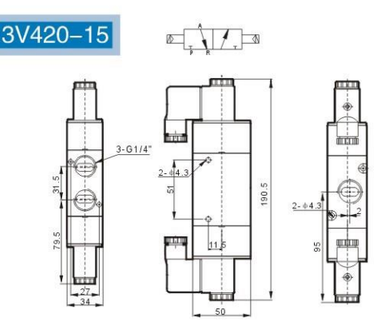

3A410-15

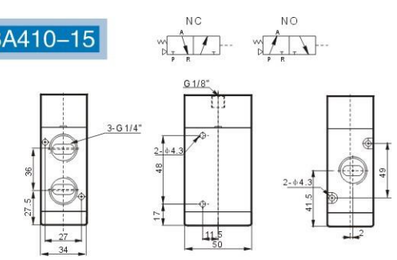

3A420-15

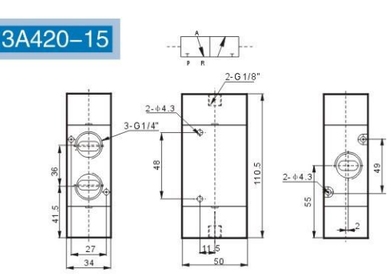

底座订购码/Blind Plate Ordering Code

100M – □F

系列代码
100M: 100系列用底座
200M: 200系列用底座
300M: 300系列用底座
400M: 400系列用底座

Series Code
100M: Base for 100 Series Use
200M: Base for 200 Series Use
300M: Base for 300 Series Use
400M: Base for 400 Series Use

连座数目
100M: 任意连
200M: 任意连
300M: 任意连
400M: 任意连

Joint Base Number
100M: Wantonly Joint
200M: Wantonly Joint
300M: Wantonly Joint
400M: Wantonly Joint

底座订购码/Blind Plate Ordering Code

200M – B

系列代码
100M: 100系列用
200M: 200系列用
300M: 300系列用
400M: 400系列用

Series Code
100M: for 100 Series Use
200M: for 200 Series Use
300M: for 300 Series Use
400M: for 400 Series Use

盲板代号
B: 底座用盲板

Blind Plate Code
B: Base Purposed Blind Plate

外形尺寸/Overall Dimension

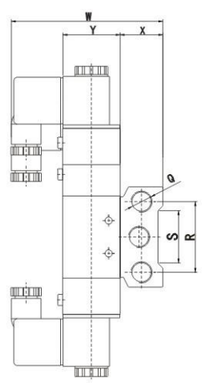

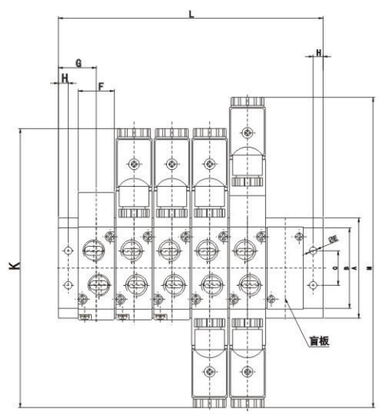

底座尺寸表/Base Size Sheet

内经 / 符号 Inside Diameter / Symbol	A	B	C	E	F	G	H	K	L	M	Q	R	S	W	X	Y
100M–□F	58	44	20	4.2	18.3	19	5	140	(N–1)*19+38	155	G1/4"	40	30	78.5	25	27
200M–□F	61	51	21	4.3	22.4	23	6	170	(N–1)*23+46	189	G1/4"	43	32	92.5	26	35
300M–□F	75	65	26	4.5	27.3	27	6	189	(N–1)*28+54	208	G3/8"	53	48	99	30	40
400M–□F	104	95	32	5.5	34.3	31.5	7	222	(N–1)*35+63	243	G1/2"	68	67	112	38	50

DLV 521–S

DLV 522–S

DLV 523–S

DLV 522–D

订购码/Ordering Code

DL – V – 52 – 2 – S – AC220V – W

型号 Model

阀类型
V: 电磁阀
A: 气控阀

Valve Type
V:Solenoid Valve
A: Pneumatic Control Valve

位通数
52:二位五通
53:三位五通
32:二位三通
22:二位二通

Position and Way Number
52:Two–position Five–way
53:Three–position Five–way
32:Two–position Three–way
22:Two–position Two–way

接管口径
Joint Pipe Bore
1: G1/8"
2: G1/4"
3: G3/8"
4: G1/2"

线圈及位数
S:单头双位置
D:双头双位置
C:双头三位置封闭型
E:双头三位置排气型
P:双头三位置压力型

Coil and Places
S:Single–head Double–position
D:Double–head Double–position
C:Double–head Three–position Close Type
E:Double–head Three–position Exhaust Type
P:Double–head Three–position Pressure Type

标准电压
Standard Voltage
DC12VDC24V
AC24V 50Hz/60Hz
AC110V 50Hz/60Hz
AC220V 50Hz/60Hz
AC380V 50Hz/60Hz

接线形式
空白：标准端子式
LD:茶色带灯端子式
LD1:白色带灯端子式
W:引线式

Wiring Form
Blank:standard Connector
LD:Brown with Lighting Connector
LD1:White with Lighting Connector
W: Lead Wire Type

规格/Specifcation

型 号 Model	DLV522S	DLV522D	DLV532C(E/P)	DLV523S	DLV523D	DLV533C(E/P)	DLV524S	DLV524D	DLV534C(E/P)
	DLA522S	DLA522D	DLA532C(E/P)	DLA523S	DLA523D	DLA533C(E/P)	DLA524S	DLA524D	DLA534C(E/P)
位通数/Position and Way NO.	二位五通/ Two–position Five–way		三位五通/ Three–position Five–way	二位五通/ Two–position Five–way		三位五通/ Three–position Five–way	二位五通/ Two–position Five–way		三位五通/ Three–position Five–way
有效截面积/Effective Sectional Area	14mm²(CV=0.78)		12mm²(CV=0.67)	25mm²(CV=1.40)		18mm²(CV=1.00)	50mm²(CV=2.79)		30mm²(CV=1.68)
工作介质/Working Medium	经40微米过滤的空气 / 40 Micron Filtered Air								
作动方式/Acting Type	内部先导式 / Inner Guide Type								
使用压力/Working Pressure	0.15 ~ 0.8MPa								
最大耐压力/Max.Pressure Resisance	1.2MPa								
工作温度/Working Temperature	5 ~ 50℃								
电压范围/Voltage Range	± 10%								
耗电量/Power Consumption	AC: 4.5VA DC: 2.5W								
绝缘性及防护等级/Insulation&Protection Class	F级. IP65 / F Class. IP65								
接线形式/Wiring Form	出线式或端子式 / Lead Wire or Connector type								
最高动作频率/Max.Frequency	每秒五次 / 5 Cycle / Sec								
最短励磁时间/Shortest Activate Time	0.05秒 / 0.05 Second								

外形尺寸/Overall Dimension

DLV522S

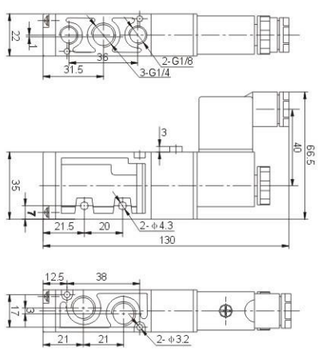

DLV522D

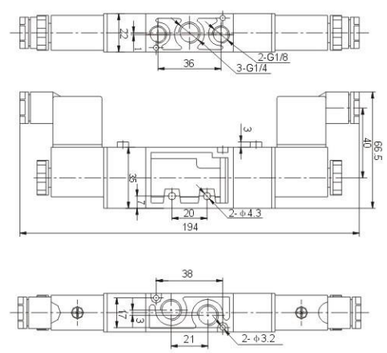

DLV523S

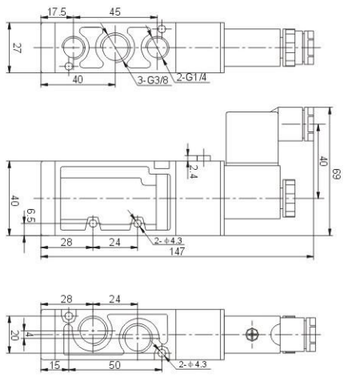

DLV523D

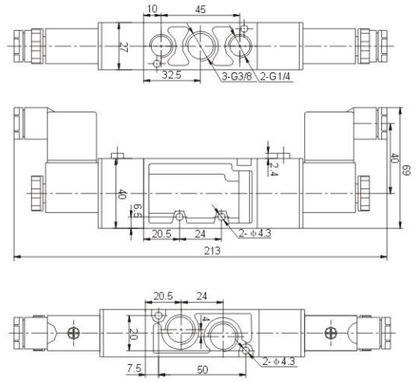

DLV524S

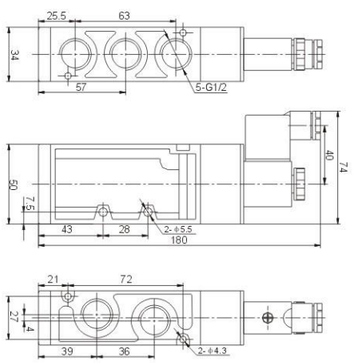

DLV524D

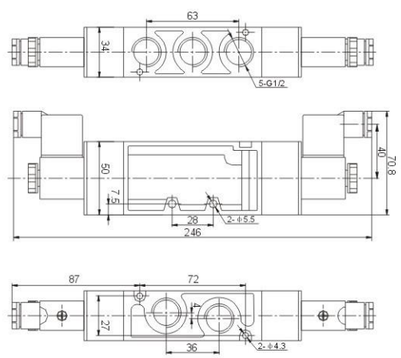

DLV-180-4E1

DLV-220-4E1

DLV-260-4E1

DLV-300-4E1

订购码/Ordering Code

DLV – 180 – 4 E2 C – AC110V – L BSP

- **DLV** — 型号 Model
- **180** — 本体宽度 Body Width
  - 180:180mm
  - 220:220mm
  - 260:260mm
  - 300:300mm
  - 460:460mm
- **4** — 3:3方向 / 4:4方向
  - 3:Three Way
  - 4:Four Way
- **E2** —
  - E1:单线圈 / E2:双线圈
  - E1:Single Coil
  - E2:Double Coil
- **C** —
  - C:中间位置关闭
  - P:中间位置通气
  - R:中间位置排气
  - C:The Middle Position Close
  - P:The Middle Position Ventilate
  - R:The Middle Position Exhaust
- **AC110V** — 标准电压 Standard Voltage
  - DC24V
  - AC110V 50Hz/60Hz
  - AC220V 50Hz/60Hz
- **L** — 接线形式
  - 空白：DIN端子式
  - L:附灯型
  - E:防爆型(表1)
  - W:出线式
  - Wiring Form
  - Blank:DIN Connector
  - L:With Lighting Connector
  - E:Blast-proof Type(sheet 1)
  - W: Lead Wire Type
- **BSP** — 接管口螺牙
  - 无：PT牙
  - BSP:BSP牙
  - NPT:NPT牙
  - Joint Pipe Thread
  - Blank: PT Thread
  - BSP: BSP Thread
  - NPT: NPT Thread

规格/Specifcation

型号 Model	DLV-180-3E1,E2	DLV-180-4E1,E2	DLV-180-4E2C.P.R	DLV-220-3E1,E2	DLV-220-4E1,E2	DLV-220-4E2C.P.R	DLV-260-4E1	DLV-260-4E2	DLV-260-4E2C.P.R	DLV-300-3E1,E2	DLV-300-4E1,E2	DLV-300-4E2C.P.R	DLV-460-3E1	DLV-460-4E1,E2	DLV-460-4E2C.P.R
接管口径代号/Joint Pipe Bore Code	6A			8A			8A			10A			15A		
位通数/Position and Way NO.	二位三通/Two-position Three-way	二位五通/Two-position Five-way	三位五通/Three-position Five-way	二位三通/Two-position Three-way	二位五通/Two-position Five-way	三位五通/Three-position Five-way	二位五通/Two-position Five-way		三位五通/Three-position Five-way	二位三通/Two-position Three-way	二位五通/Two-position Five-way	三位五通/Three-position Five-way	二位三通/Two-position Three-way	二位五通/Two-position Five-way	三位五通/Three-position Five-way
接管口径/Joint Pipe Bore	PT-1/8"			PT-1/4"			PT-1/4"			PT-3/8"			PT-1/2"		
使用流体/Operating Fluid	空气 Air														
使用压力范围/Working-pressure Range	0.15～0.8MPa	0.2～0.7MPa				0.3～0.7MPa	0.2～0.7MPa		0.3～0.7MPa	0.2～0.7MPa		0.3～0.7MPa	0.2～0.7MPa		0.3～0.7MPa
耐压力/Pressure Resisance	1.0MPa												1.05MPa		
有效截面积/Effective Sectional Area	12mm²(CV=0.67)		9mm²(CV=0.50)	18mm²(CV=1.00)		16mm²(CV=0.89)	18mm²(CV=1.00)		16mm²(CV=0.89)	35mm²(CV=1.96)		25mm²(CV=1.40)	50mm²(CV=2.79)		30mm²(CV=1.68)
应答时间/Answer Time	30ms			30ms			40ms			40ms			50ms		
工作介质/Working Medium	经40微米过滤的空气 / 40 Micron Filtered Air														
作动方式/Acting Type	内部先导式 / Inner Guide Type														
使用压力/Working Pressure	0.15～0.8MPa														
工作温度/Working Temperature	5～50℃														
标准电压/Standard Voltage	AC: 110V, 220V (50/60)Hz DC: 24V														
耗电量/Power Consumption	AC: 3.7/3.1VA DC: 2.9W			AC: 6/4.9VA DC: 2.5W											
电压范围/Voltage Range	±10%														
绝缘级数/Insulation Class	F级 F Class														

防爆型规格/Blast-proof Type Specifcation

220\260\300\460系列电磁阀表1
220\260\300\460Series Solenoid Valve(Sheet 1)

防爆等级 Blast-proof Class	EEx m Ⅱ T4
标准电压 Standard Voltage	AC: 110V, 220V (50/60)Hz DC: 24V
耗电量 Power Consumption	AC: 4.4VA DC: 5W
电压范围 Voltage Range	±10%
绝缘等级 Insulation Class	F 级 / F Class

外形尺寸/Overall Dimension

DLV–180–4E1

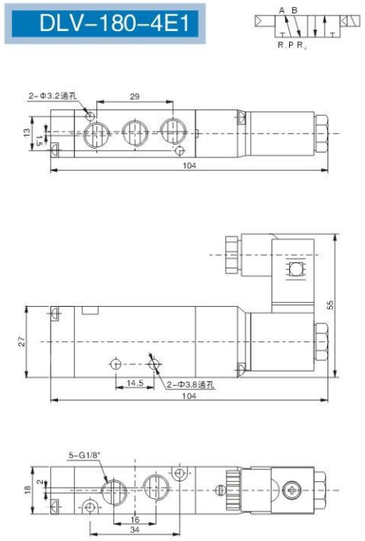

DLV–180–4E2

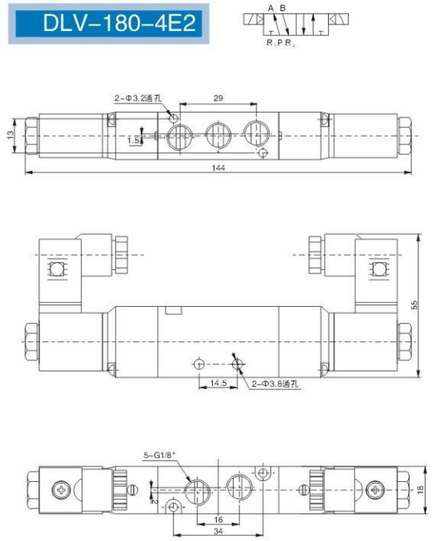

DLV–180–4E2C.P.R

VSC/D–180–4E2C

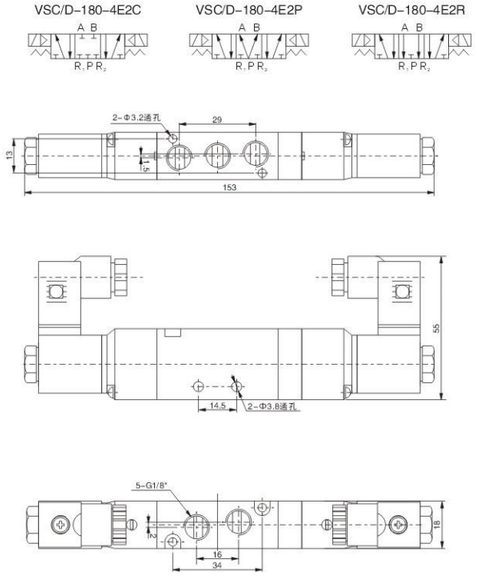

VSC/D–180–4E2P

VSC/D–180–4E2R

流量特性图/Flow Chart

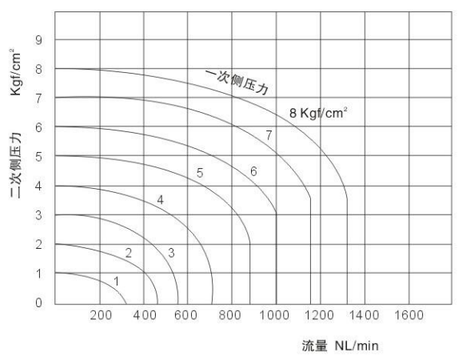

外形尺寸/Overall Dimension

DLV–220–4E1

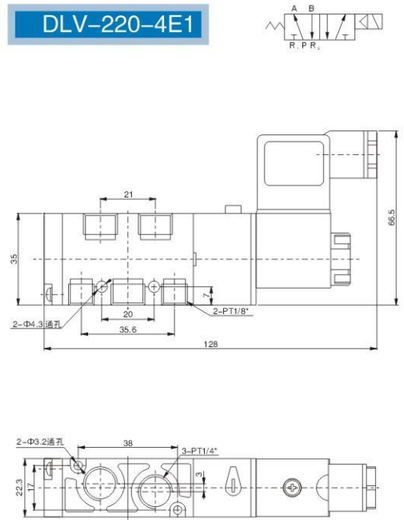

DLV–220–4E2

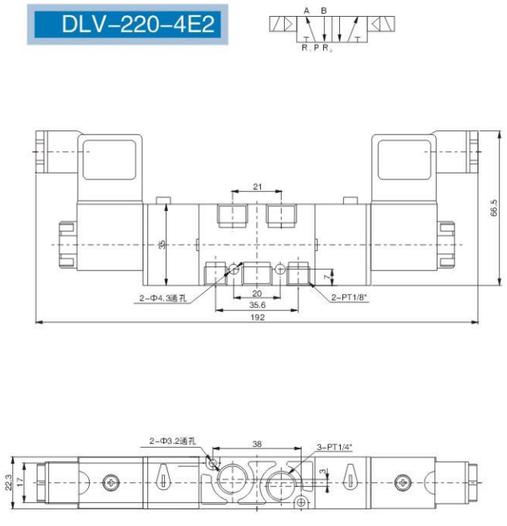

DLV–220–4E2C.P.R

DLV–220–4E2C

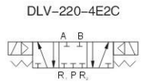

DLV–220–4E2P

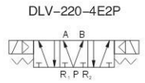

DLV–220–4E2R

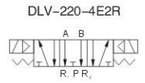

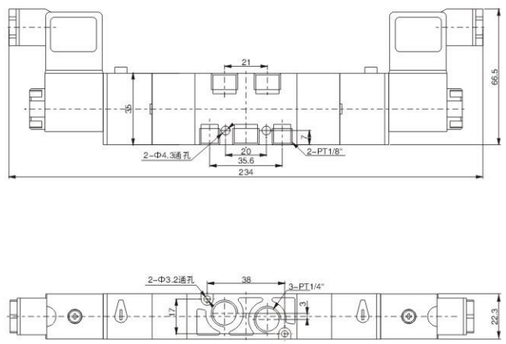

流量特性图/Flow Chart

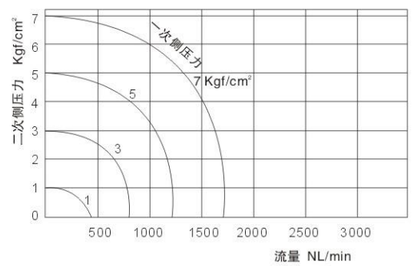

外形尺寸/Overall Dimension

DLV–260–4E1

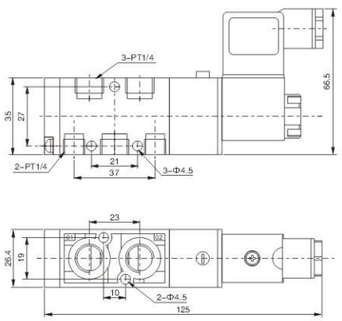

DLV–260–4E2

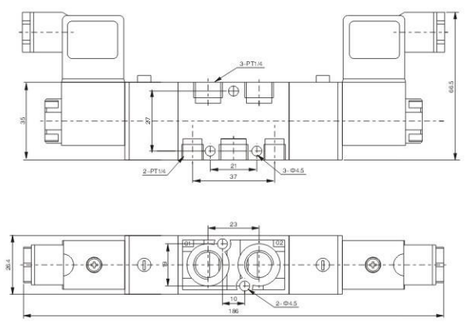

DLV–260–4E2C.P.R

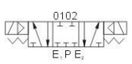

DLV–260–4E2C

DLV–260–4E2P

DLV–260–4E2R

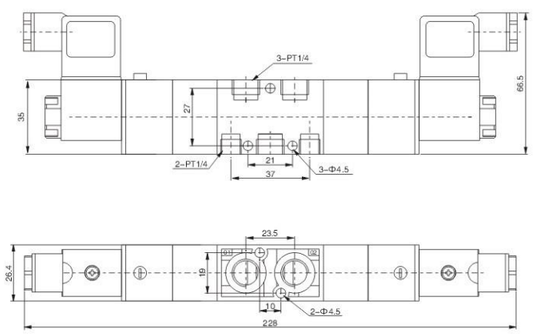

流量特性图/Flow Chart

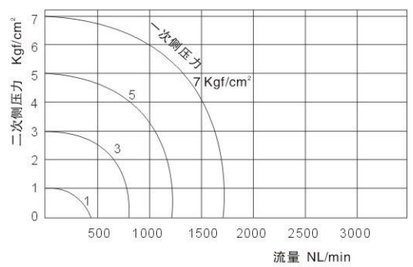

外形尺寸/Overall Dimension

DLV–300–4E1

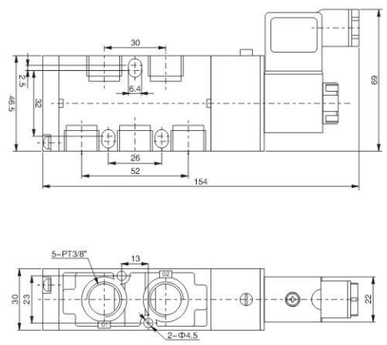

DLV–300–4E2

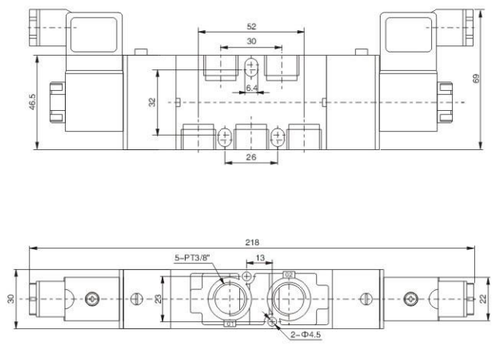

DLV–300–4E2C.P.R

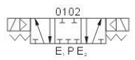

DLV–300–4E2C

DLV–300–4E2P

DLV–300–4E2R

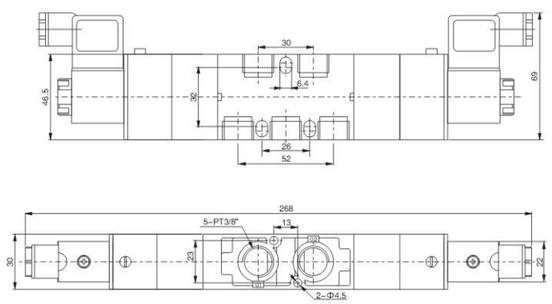

流量特性图/Flow Chart

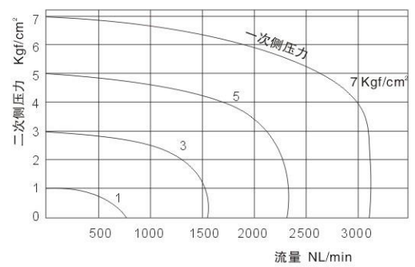

外形尺寸/Overall Dimension

DLV–460–4E1

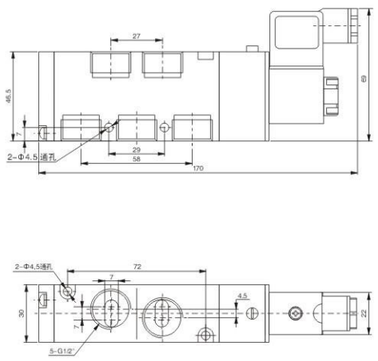

DLV–460–4E2

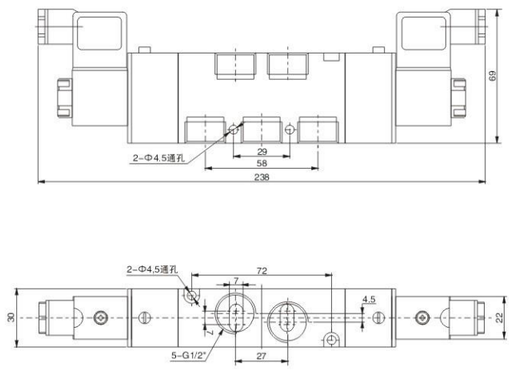

DLV–460–4E2C.P.R

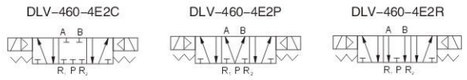

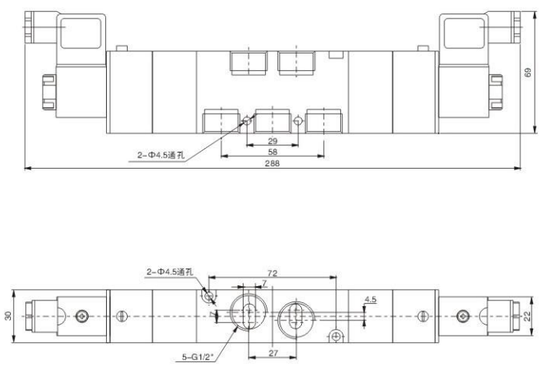

流量特性图/Flow Chart

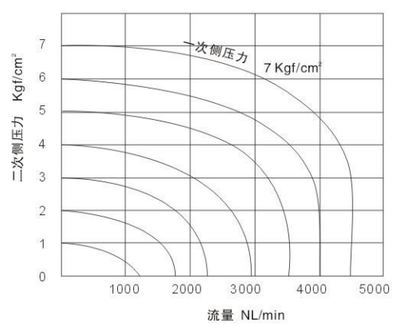

VF 3130(可拆)

VF 5120(可拆)

VF 3130

VF 5220

订购码/Ordering Code

VF3 1 – 30 AC220V – W

系列代码
VF3系列
VF5系列
Series Code
VF3 Series
VF5 Series

线圈及位数
1:单头双位置
2:双头双位置
3:双头三位置封闭型
4:双头三位置排气型
5:双头三位置压力型
Coil and Places
1:Single–head Double–position
2:Double–head Double–position
3C:Double–head Three–position Close Type
4:Double–head Three–position Exhaust Type
5:Double–head Three–position Pressure Type

顺序号
Order NO.
VF3: 30
VF5: 20
VZ5: 20

标准电压
Standard Voltage
DC12VDC24V
AC24V 50Hz/60Hz
AC110V 50Hz/60Hz
AC220V 50Hz/60Hz
AC380V 50Hz/60Hz

接线形式
空白:标准端子式
LD:茶色带灯端子式
LD1:白色带灯端子式
W:引线式
Wiring Form
Blank:standard Connector
LD:Brown with Lighting Connector
LD1:White with Lighting Connector
W: Lead Wire Type

规格/Specifcation

型号 Model	VF3130	VF3230	VF33(4/5)30	VF5120	VF5220	VF53(4/5)50	VZ5120	VZ5220	VZ53(4/5)50
位通数 Position and Way NO.	二位五通 Two–position Five–way		二位五通 Two–position Five–way	二位五通 Two–position Five–way		二位五通 Two–position Five–way	二位五通 Two–position Five–way		三位五通 Three–position Five–way
有效截面积 Effective Sectional Area	16mm²(CV=0.89)		12mm²(CV=0.67)	25mm²(CV=1.40)		18mm²(CV=1.00)	12mm²(CV=0.67)		9mm²(CV=0.50)
工作介质 Working Medium	空气 (经40um滤网过滤) / Air (40Micron Filtered)								
作动方式 Acting Type	内部先导式 / Inner Guide Type								
使用压力 Working Pressure	0.15 ~ 0.8MPa								
最大耐压力 Max. Pressure Resisance	1.2MPa								
工作温度 Working Temperature	5 ~ 50°C								
电压范围 Voltage Range	±10%								
耗电量 Power Consumption	AC: 4.5VA DC: 3W								
绝缘性及防护等级 Insulation & Protection Class	F级. IP65 / F Class. IP 65								
接线形式 Wiring Form	出线式或端子式 / Lead wire or Connector type								
最高动作频率 Max. Frequency	0.05秒 / 0.05 Second								
最短励磁时间 Shortest Activate Time	每秒五次 / 5 Limes / Sec								

外形尺寸/Overall Dimension

VF3130

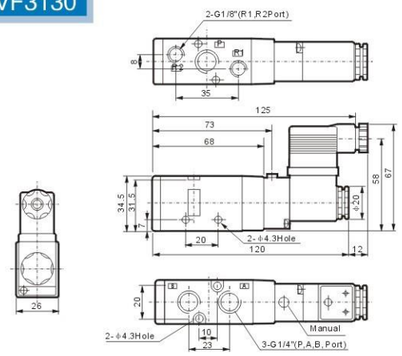

VF3230

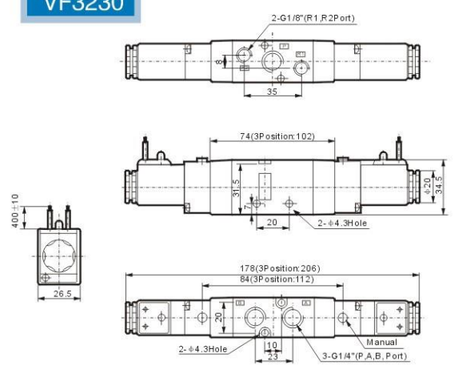

VF5120

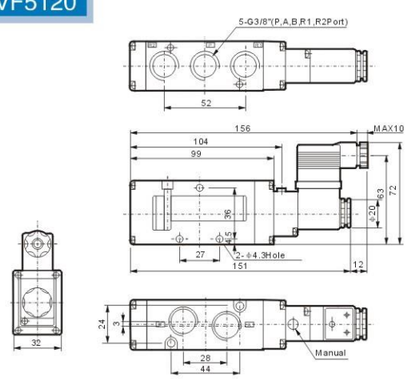

VF5220

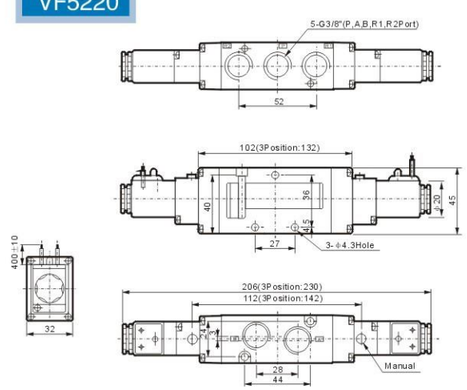

VZ5120

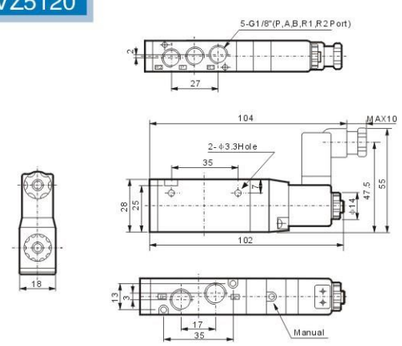

VZ5220

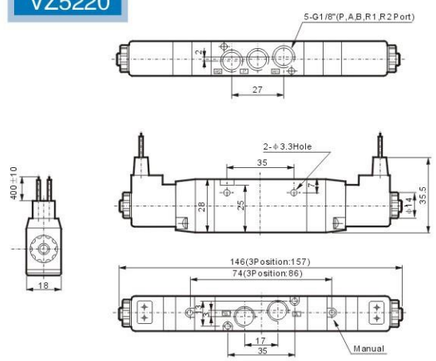

订购码/Ordering Code

VF3000M — **□F**

规格代码	连座数目
VF3000M: VF3系列用	VF3000M:任意数
VF5000M: VF5系列用	VF5000M:任意数
VZ5000M: VZ5系列用	VZ5000M:任意数
Series Code	Joint Base Number
VF3000M:For VF3 Series Use	VF3000M:Wantonly Joint
VF5000M:For VF5 Series Use	VF5000M:Wantonly Joint
VZ5000M:For VZ5 Series Use	VZ5000M:Wantonly Joint

外形尺寸/Overall Dimension

VF3000M

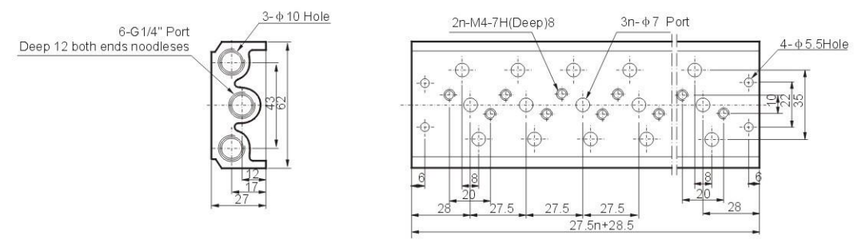

VF5000M

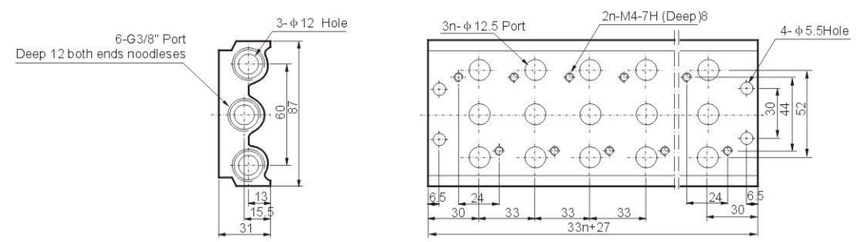

VZ5000M

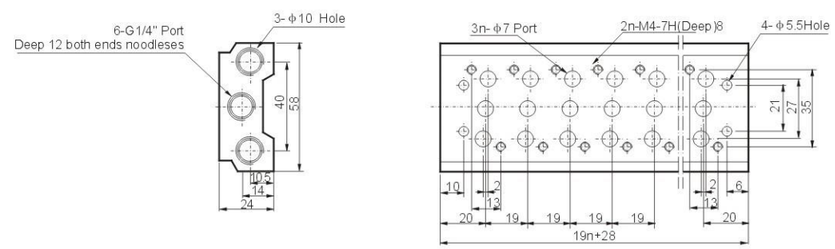

订购码/Ordering Code

3V 1 – 06 B – AC220V – W

规格代码
3V:二位三通电磁阀
Specifcation Code
3V: Two-position Three-way Solenoid Valve

系列代码
100系列
Series Code
100 Series

接管口径
Joint Pipe Bore
M5:M5 × 0.8
06:G1/8"

连接形式
空白:管接式
B:板接式
Connecting Type
Blank:Pipe Connection Type
B:Plate Connection Type

标准电压
Standard Voltage
DC12V
DC24V
AC24V 50Hz/60Hz
AC110V 50Hz/60Hz
AC220V 50Hz/60Hz
AC380V 50Hz/60Hz

接线形式
空白：标准端子式
LD:茶色带灯端子式
LD1:白色带灯端子式
W:引线式
Wiring Form
Blank:standard Connector
LD:Brown with Lighting Connector
LD1:White with Lighting Connector
W: Lead Wire Type

规格/Specifcation

型 号 Model	2V025-06	2V025-08
工作介质 Working Medium	空气 、水、油 / Air, Water, Oil	
作动方式 Acting Type	直动式 / Direct Drive-Type	
型式 Type	常闭型 / Normal Close-Type	
流量孔径 Aperture of Flow Rate	2.5	
CV值 CV Value	0.23	
接管口径 Joint Pipe Bore	G1/8"	G1/8"
使用流体粘滞度 Operation Fluid Viscosity	20 CST以下 (Below)	
使用压力 Working Pressure	空气 、水、油 /Air, Water, Oil: 0 ~ 1.0MPa	
最大耐压力 Max. Pressure Resisance	1.5MPa	
工作温度范围 Working Temperature Range	-10 ~ 80°C	
使用电压范围 Voltage Range	±10%	
保护等级 Protect Class	IP 65	
耗电量 Power Consumption	AC: 7VA/60Hz, 9VA/50Hz; DC: 6W	
绝缘性 Insulation	F级/F Class	
本体材质 Meterial of Boby	铝或铜 / Aluminum or Brass	
油封材质 Meterial of Oil Seal	NBR 或 VITON / NBR or VITON	
最短励磁时间 Shortest Activate Time	0.05秒/Second	

外形尺寸/Overall Dimension

3V1-06

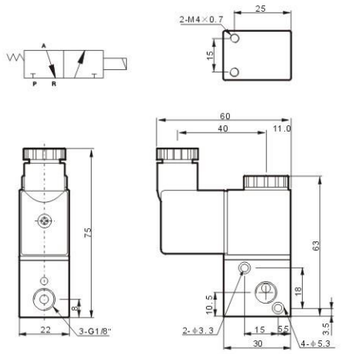

外形尺寸/Overall Dimension

3V1-06-3F

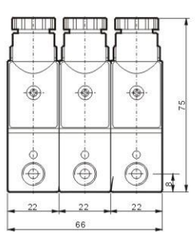

3V1-06B-3F

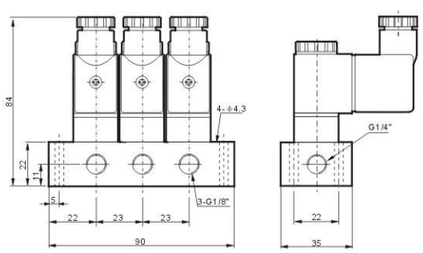

3V1-06B

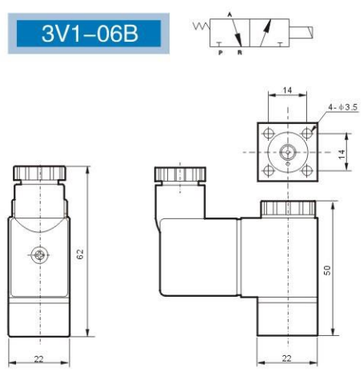

MSV86522-PPL MSV86522-TB MSV86522-LB MSV86522-PB MSV86522-PP MSV86522-EB MSV86522-R

MSV98322-PPL MSV98322-TB MSV98322-LB MSV98322-PB MSV98322-PP MSV98322-EB MSV98322-R

订购码/Ordering Code

MSV 86 32 1 R

规格代码
机械阀
Specifcation Code
Mechanical Valve

系列代号
86系列
98系列
Series Code
86 Series
98 Series

位通数
32:二位三通
52:二位五通
Position and Way NO.
32:Two-position Three-way
52:Two-position Five-way

接口口径
Joint Pipe Bore
1: G1/8"
2: G1/4"

按钮形式 / Button Type
空白:基本型 / Blank: Basic Type
R: 滚轮型 / Roller Type
TB: 选择型旋钮 / Selective Knob
LB: 加长型旋钮 / Strengthened Knob
PB: 大圆型按钮 / Large Round Button
PP: 平圆型按钮 / Plat Round Button
PPL:凸圆型按钮 / Convex Round Button
EB: 带锁型按钮 / With Lock Button

外形尺寸/Overall Dimension

MSV86522

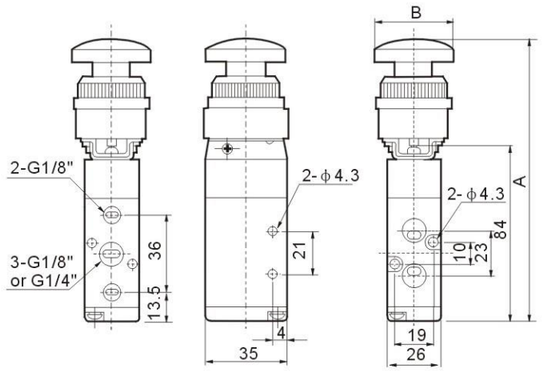

MSV98322

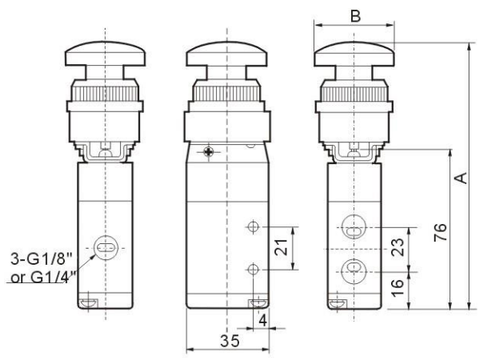

MSV86321

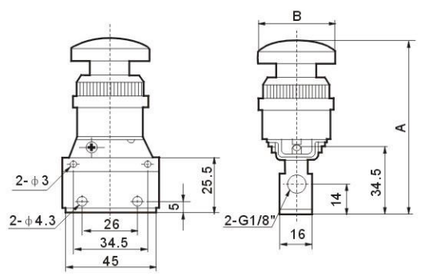

尺寸表/Dimension Sheet

系列 Series	符号 / 型号 Symbol/Model	PP	PPL	LB	TB	EB	PB	R
MSV86522	A	114	119	133	136.5	134	131	107.5
	B	39.5	24.5	26.5	36.5	39.5	37.5	42.5
MSV98322	A	106	111	125	129.5	126	123	99.5
	B	39.5	24.5	26.5	36.5	39.5	37.5	42.5
MSV86321	A	66	71	85	88.5	86	83	59.5
	B	39.5	24.5	26.5	36.5	39.5	37.5	42.5

PP

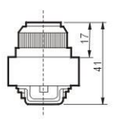

PPL

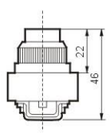

TB

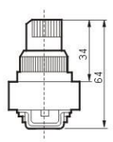

LB

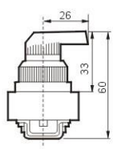

PB

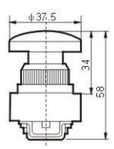

EB

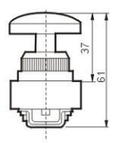

R

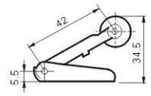


JM-05


JM-06


JM-06A


JM-07

规格/Specifcation

型号/Model	JM-05	JM-06	JM-06A	JM-07
工作介质/Working Medium	经40微米过滤的空气/40 Micron Filtered Air			
位通数/Position and Way NO.	0~0.8MPa			
接口口径/Port Size	G1/4"			
使用压力范围/Working-pressure Range	二位三通, 二位二通 Two-position Three-way,Two-position Two-way			
使用温度范围/Operating Temperature	0~60℃			

尺寸表/Dimension Sheet

型号/Model	JM-05	JM-06	JM-06A	JM-07
A	114	111	96	84.5
B	36.5	39.5	39.5	42.5

订购码/Ordering Code

JM – 05

规格代码
截止式机械阀
Specifcation Code
Stop-type Machinery Valve

按钮形式 / Button Type
05: 选择型旋钮 / Selective Knob
06: 连锁型按钮 / With Lock Button
06A: 平圆型按钮 / Plat Round Button
07: 滚轮型 / Roller Type

外形尺寸/Overall Dimension

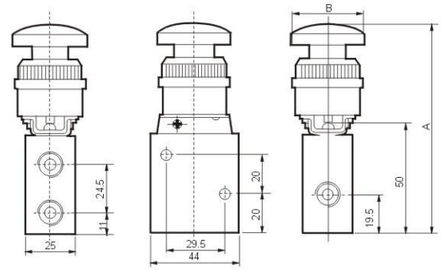

图形符号/Graphic Symbol

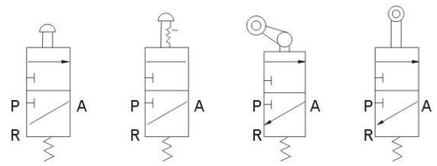


S3L-06


S3R-06


S3HL-06


S3PP-06

订购码/Ordering Code

S3 PM – 06 R – □

结构代号
Specifcation Code
S3: S型三口二位
S3:S Type 3/2

规格代码
Specifcation Code
B：基本型机械阀
C：长柄型手动阀
D：短柄型手动阀
Y：摇臂型手动阀
R：滚轮杠杆型机械阀
L：单向滚轮杠杆型机械阀
V：垂直滚轮型机械阀
PL:停驻旋转按钮型手动阀
PP:凸头按钮型手动阀
PF:平头按钮型手动阀
PM:蘑菇头按钮型手动阀
HS:选择型手动阀

B: the basic mechanical valve
C: the type long handle manual valve
D: short shank type manual valve
Y: manual valve rocker arm type
R: roller lever type mechanical valve
L: one-way roller lever type mechanical valve
V: the vertical type roller mechanical valve
PL: stop rotation button type manual valve
PP: convex head type button manual valve
PF: flat button type manual valve
PM: mushroom head type button manual valve
HS: wide choices of manual valve

接管口径
Joint Pipe Bore
05:M5
06:PT1/8
08:PT1/4

按钮颜色
Connecting Type

產品規格	按鈕顏色
PL型	R:紅色
PP型/PF型 PM型/HS型	R:紅色
	G:绿色
	B:黑色
其它規格	無此代碼

牙型代码
Standard Voltage

接管口徑	牙型代碼
M5	無此代碼
1/8 1/4	空白:PT牙
	T:NPT牙
	G:G牙

特征/Features

1、S3B、S3R、S3L、S3V系列换向所需外力由外部机构提供，可用于位置检测或行程开关；
2、S3PF、S3PM、S3PP、S3PL、S3Y、S3HS、S3C、S3D系列为手动操作，多种结构形状控制颈，方便不同条件下使用；
3、截止式结构，密封性好，换向灵活，无需加油润滑；
4、多位置安装，安装使用方便；
5、S3C、S3D、S3Y、S3R、S3L系列控制头为金属材质，寿命畏、更可靠稳定。

1. S3B, S3R, S3L, S3V series reversing the external force is provided by external agencies,Can be used for position detection or travel switch;
2. S3PF, S3PM, S3PP, S3PL, S3Y, S3HS, manipulated, S3D department As a manual operation, a variety of structure shape control neck, convenient use under different conditions;
3. cut-off structure, good sealing, reversing flexible, without lubrication;
4. or more location to install, easy to install and use;
5. Manipulated, S3D, S3Y, S3R and S3L series control head for metal, life Fear and more reliable stability.

规格/Specifcation

型 号 Model	S3B	S3B	S3D	S3V	S3R	S3L	S3Y	S3PM	S3PP	S3PF	S3PL	S3HS
工作介质 Working Medium	空气(经40微米以上滤网过滤)/Air(40 Micron Filtered Air)											
作动方式/Acting Type	外部控制直动式/External direct lift control											
接管口径/Port Size ①	05:M5; 06:PT1/8; 08:PT1/4											
有效截面积/Effective Sectional Area	05:2.5 mm² (Cv=0.14); 06:8.0mm² (Cv=0.45); 08:12.0mm² (Cv=0.67)											
位通数/Position and Way NO.	三口二位											
润滑/Lubricate ②	不需要/Not Necessary											
使用压力范围/Working Pressure Range	0~0.8MPa(0~114psi)											
保证耐压力/Ensured Pressure Resistance	1.5MPa(215psi)											
工作温度/Working Temperature	-20~70											
本体材质/Meterial of Boby	铝合金/Aluminum alloy											

① 接管牙型有NPT、G牙可供选择； To take over the selection of tooth tooth type with NPT, G;
② 如有加油润滑，中途不可停止，建议润滑油为ISO VG32或同级用油。If there are any lubrication, not stop halfway, suggest lubricating oil for ISO VG32 or oil at the same level.

流量图/Flow diagram

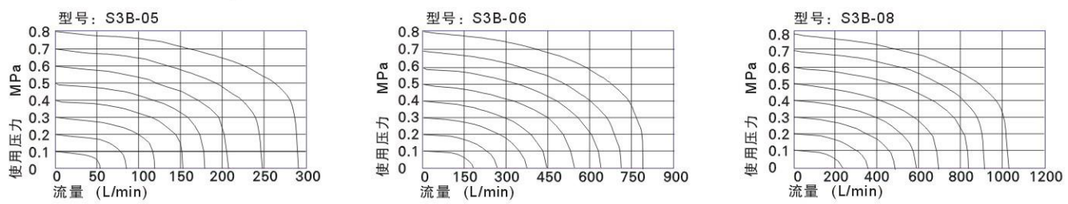

内部结构图/Internal structure

S3PM型

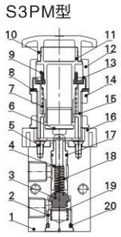

序号	名称	序号	名称
1	本体	11	按钮主体
2	底盖	12	按钮上盖
3	塞头	13	按钮压环
4	阀芯	14	夹紧螺母
5	十字埋头螺钉	15	按钮固定体
6	按钮压扣	16	按钮固定块
7	弹簧	17	O型环
8	夹紧垫片	18	弹簧
9	防护罩	19	弹簧
10	按钮帽	20	O型环

换向行程/

单位：mm

阀型号	阀芯行程	按钮行程
S3B	2.4~4.0	-
S3PF	2.4~4.0	3.8~5.4
S3PP	2.4~4.0	3.8~5.4
S3PM	2.4~4.0	3.8~5.4
S3PL	2.4~4.0	5.9~7.5
S3HS	2.4~4.0	5.1~6.7
阀型号	阀芯行程	滚轮(手柄)行程
S3R	2.4~3.4	5.5~7.8
S3L	2.4~3.4	6.0~8.6
S3V	2.4~3.8	3.4~4.8
S3C	2.4~3.8	14.4~18.4
S3D	2.4~3.8	7.4~9.4

安装与使用/Internal structure

本体固定方式　　面板固定方式

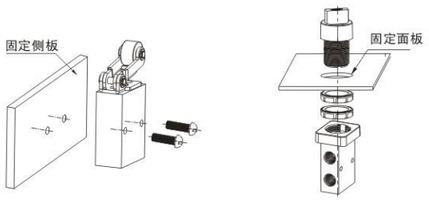

注意事项

1)控制部分材料为工程塑料，只允许人工用手操作。禁止用金属撞击来使阀切换。
2)S3B、S3C、S3D、S3PM、S3PF、S3PP手动阀为手动复位。S3Y、S3HS、S3PL手动阀为手动复位。其中S3PL押入定位后，须转旋转钮才能复位。
3)注意换向行程，任何外力使阀换向时，其换向行程都不能超过控制行程表规定的换向行程范围，否则会造成阀体损坏。
4)S3L单向滚轮阀只有单方向能使阀切换(由右向左撞击)。另一个方向无效撞击(由左向右)。
5)控制头组合可单独订购，具体定稿方式参照右表。

1) the control part of the material is engineering plastics, only allow manual operated by hand. Use metallic to switch valve is prohibited.
2) S3B, manipulated, S3D, S3PM, S3PF, S3PP manual valve as a manual reset. S3Y, S3HS, S3PL manual Valve as a manual reset. After the S3PL YaRu positioning, must turn to rotate button to reset.
3) pay attention to the reversing schedule, any external force make the reversing valve, control its reversing schedule cannot exceed schedule of reversing Cheng scope, otherwise it will cause the body is damaged.
4) S3L roller one-way valve can make only a single direction valve switch (impact from right to left). In the other direction is invalid impact (from left to right).
5) control head combination can separate order, finalized methods with reference to the right table.

外部规格/Internal structure

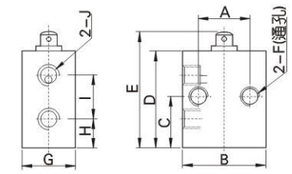

型号/Model	A	B	C	D	E	F	G	H	I	J
M5	16	26	15	30	36	M5×0.8	16.5	9	13	M5×0.8
06	23	30	20.5	41	47	M5×0.8	16.5	11.5	17.5	PT1/8
08	24	34	22.5	46	52	M5×0.8	17.5	12	21	PT1/4

型 号 Model	C 长柄型		D 短柄型		Y 摇柄型	
订购方式	订购码	规 格	订购码	规 格	订购码	规 格
	M3C210-P13A	M3C210长柄组合	M3D210-P13A	M3D210短柄组合	M3Y210-P13A	M3Y210摇柄组合
适用产品	S3C05、S3C06、S3C08		S3D05、S3D06、S3D08		S3Y05、S3Y06、S3Y08	
外部尺寸	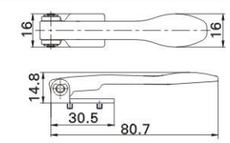		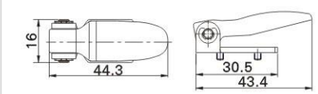		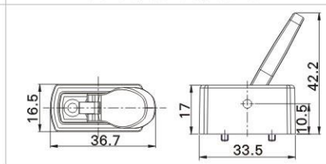	

型 号 Model	R 滚轮杠杆型		L单向滚轮杠杆型		V 垂直滚轮型	
订购方式	订购码	规 格	订购码	规 格	订购码	规 格
	M3R210-P14A	M3R210滚轮杠杆型组合	M3L210-P14A	M3LR210单向滚轮杠杆型组合	S3V05(06,08)-P14	S3V05(06,08)-P14垂直滚轮型组合
适用产品	S3R05、S3R06、S3R08		S3L05、S3L06、S3L08		S3V05、S3V06、S3V08	
外部尺寸	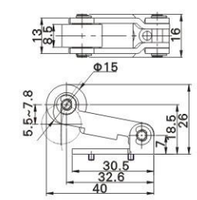		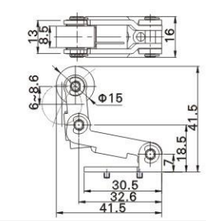		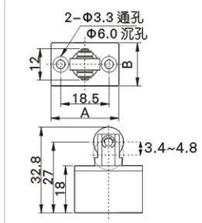	

符号 型号	A	B
05型	26	16.5
06型	30	16.5
08型	34	17.5

型 号 Model	PP 凸头按钮型		PM蘑菇头按钮型		PL 停驻旋转按钮型	
订购方式	订购码	规 格	订购码	规 格	订购码	规 格
	S3PP05-P11A	S3PP凸头按钮组合(绿色)	S3PM05-P11A	S3PM凸按钮组合(绿色)	S3PL05-P12A	S3PL停驻旋转按钮(红色)
	S3PP05-P12A	S3PP凸头按钮组合(红色)	S3PM05-P12A	S3PM凸按钮组合(红色)		
	S3PP05-P13A	S3PP凸头按钮组合(黑色)	S3PM05-P13A	S3PM凸按钮组合(黑色)		
适用产品	S3PP05、S3PP06、S3PP08		S3PM05、S3PM06、S3PM08		S3PL05、S3PL06、S3PL08	
外部尺寸	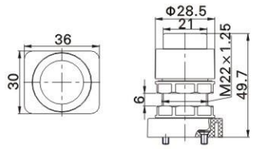		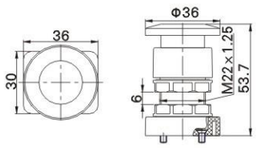		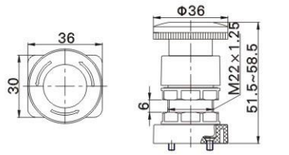	

型 号 Model	PP 平头按钮型		外部尺寸
订购方式	订购码	规 格	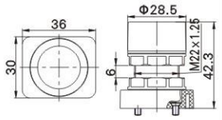
	S3PF05-P11A	S3PF平头按钮组合(绿色)	
	S3PF05-P12A	S3PF平头按钮组合(红色)	
	S3PF05-P13A	S3PF平头按钮组合(黑色)	
适用产品	S3PF05、S3PF06、S3PF08		

型 号 Model	PP 旋钮型		外部尺寸
订购方式	订购码	规 格	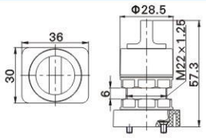
	S3HS05-P11A	S3HS旋钮组合(绿色)	
	S3HS05-P12A	S3HS旋钮组合(红色)	
	S3HS05-P13A	S3HS旋钮组合(黑色)	
适用产品	S3HS05、S3HS06、S3HS08		

MOV-01

MOV-02

MOV-03

MOV-03A

订购码/Ordering Code

MOV – 02 A

型号
Type

按钮形式
01:选择型旋钮
02:滚轮型
03:连锁型按钮
03A:平圆型按钮
Button Type
01:Selective Knob
02:Roller Type
03:With Lock Button
03A:Plat Round Button

空白：固定式
A：弹簧复位式
Blank:Standard Type
A: Spring ReturnType

规格/Specifcation

型 号 Model	MOV-01	MOV-02	MOV-03	MOV-03A
使用液体 Operating Fluid	空气 / Air			
位通数 Position and Way Number	二位三通 Two-position Three-way			
接管口径 Joint Pipe Bore	G1/8"			
使用压力范围 Working Pressure Range	0～0.8MPa			
使用温度范围 Operating Temperature Range	0～70°C			

外形尺寸/Overall Dimension

MOV-01

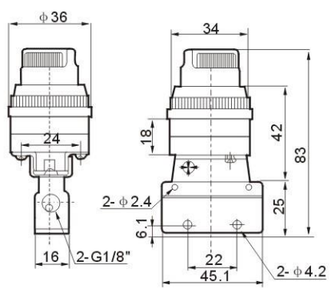

MOV-02

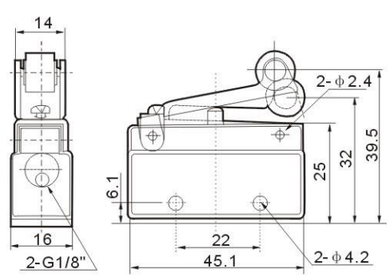

MOV-03

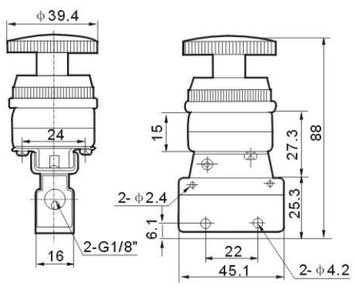

MOV-03A

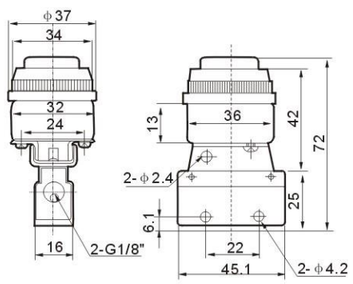

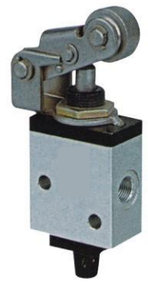

DL230612

301-V

3V-1

MTV-4

订购码/Ordering Code

DL – 23 – 06 – 12

DL series

规格代码
Model
23: 二位三通
25: 二位五通
23:Two-position Three-way
25:Two-position Five-way

接管口径
Joint Pipe Bore
04: G1/8"
06: G1/4"

标准电压
Standard Voltage
DC12V
DC24V
AC24V 50Hz/60Hz
AC110V 50Hz/60Hz
AC220V 50Hz/60Hz
AC380V 50Hz/60Hz

3V – 1

规格代码
Model
3V：二位三通
4V：二位五通
3V:Two-position Three-way
4V:Two-position Five-way

接管口径
Joint Pipe Bore
M: M5
1: G1/8"

301 – V – 1

规格代码
Model
301：二位三通
401：二位五通
301:Two-position Three-way
401:Two-position Five-way

按钮形式
Button Type
V：中间开关
P：按钮式
R：滚轮式
V:Middle Switch
P:Button Type
R:Roller Type

接管口径
Joint Pipe Bore
1: G1/8"
M: M5

图形符号/Graphic Symbol

250612

4V

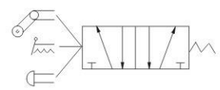

401

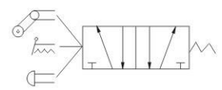

230612

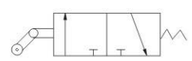

3V

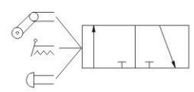

301

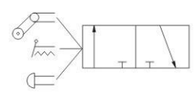

4F210-08

4F210-08LG

FV320

4F210-08L

4FM210-08L

FV420

订购码/Ordering Code

4F	2	10	–	08	L
规格代码 4F:二位五通脚踏阀 Specifcation Code 4F: Two-position Five-way Foot Valve	系列号 Series NO. 2: 200系列	位置数 10 : 单头双位置 Number of Places 10: Single-head Double-position		接口口径 Joint Pipe Bore 08: G1/4"	形式代号 空白：标准型 L：附锁型 G：附罩型 LG：附锁及罩型 Type Code Blank:standard type L: with lock G: with cover LG: with lock and cover

FV	–	320
规格代码 脚踏阀 Specification Code Foot Valve		位通数 320二位三通 420三位四通 Position and Way NO. 320: Two-position Three-way 420: Two-position Four-way

规格/Specifcation

型 号 Model	4F210-08	4F210-08L	4F210-08G	4F210-08LG	FV420	FV320
工作介质 Working Medium	空气 (经40um滤网过滤) / Air (40Micron Filtered)					
位通数 Position and Way Number	二位五通 Two-position Five-way				二位四通 Two-position Four-way	二位三通 Two-position Three-way
接管口径 Joint Pipe Bore	进气=出气=排气=G1/4" Air Inlet=Air Outlet=Exhaust=G 1/4"				进气=出气=G1/4" 排气=G1/8" Air Inlet=Air Outlet=G1/4" Exhaust=G1/8"	
作动方式 Acting Type	直动式 / Direct Drive-Type					
使用压力范围 Working Pressure Range	0 ~ 0.8MPa					
使用温度范围 Operating Temperature Range	0 ~ 60°C					

外形尺寸/Overall Dimension

4F210-08

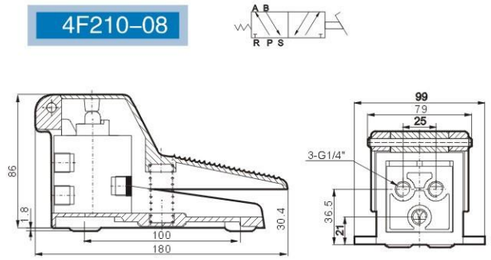

4F210-08L

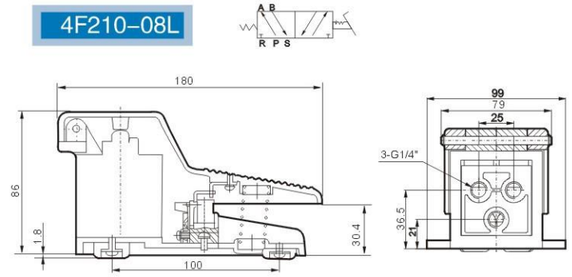

4F210-08G

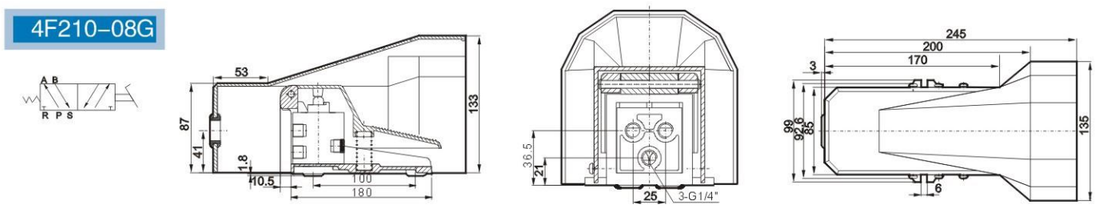

4F210-08LG

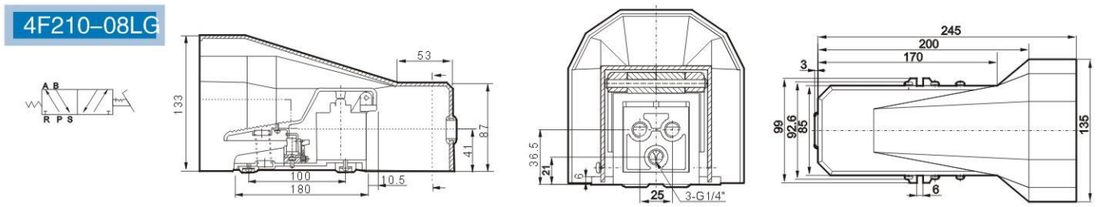

FV420

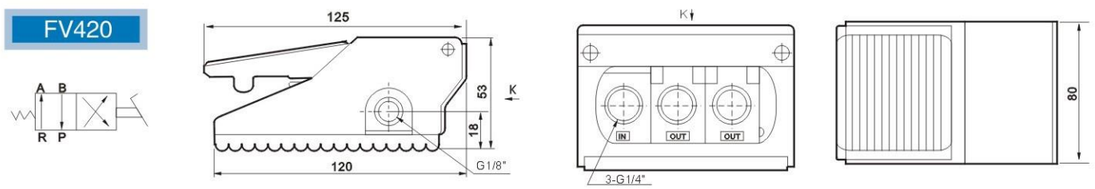

FV320

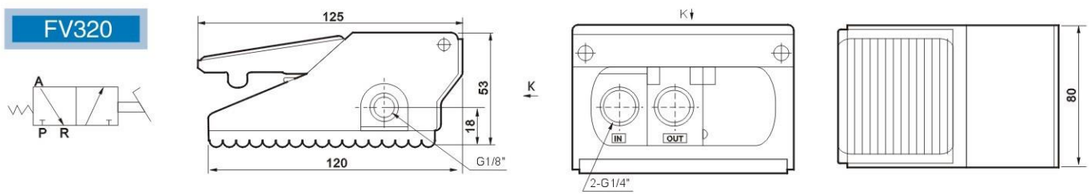

订购码/Ordering Code

4FM	2	10	–	08	L
规格代码	系列号	位置数		接口口径	形式代号
4FM:二位四通迷你脚踏阀	Series NO.	10 :单头双位置		Joint Pipe Bore	空白：标准型
Specifcation Code	2: 200系列	Number of Places		06: PT1/8	L：附锁型
4FM: Two-position Four-way Mini Foot Valve		10: Single-head Double-position		08: PT1/4	Type Code
					Blank:standard type
					L: with lock

图形符号/Graphic Symbol

不附锁/Without lock

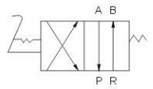

附锁/with lock

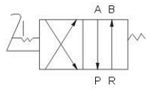

规格/Specifcation

型号 Model	4FM210-06	4FM210-06L	4FM210-08	4FM210-08L
工作介质 Working Medium	空气 / Air			
位通数 Position and Way Number	二位四通 Two-position Four-way			
接管口径 Joint Pipe Bore	进气=出气=PT1/8" Air Inlet=Air Outlet=PT1/8"		进气=出气=PT1/4" Air Inlet=Air Outlet=G1/4"	
作动方式 Acting Type	直动式 / Direct Drive-Type			
使用压力范围 Working Pressure Range	0～0.8Kgf/cm²			
使用温度范围 Operating Temperature Range	-5～60℃			
润滑Lubricate	不需要 / Not Necessary			

外形尺寸/Overall Dimension

4FM210

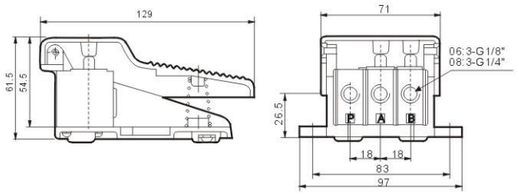

4FM210L

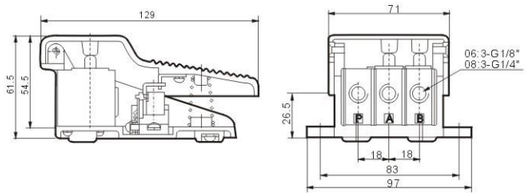

3R210-08 3R310-10 4R210-08 4R310-10

订购码/Ordering Code

4R	2	10	–	06
规格代码	系列代号	位置数		接口口径
4R: 二位五通手拉阀	200系列	10: 单头双位置		Joint Pipe Bore
3R: 二位三通手拉阀	300系列	Number of places		06:G1/8"
Specifcation Code	Series Code	10: Single-head Double-position		08: G1/4"
4R:Two-position Five-way Hand-draw Valve	200 Series			10: G3/8"
3R: Two-position Three-way Hand-draw Valve	300 Series			

规格/Specifcation

型号/Model	4R110-06	4R210-06	4R210-08	3R210-06	3R110-08	4R310-08	4R310-10	3R310-08	3R310-10
工作介质/Working Medium	经40微米过滤的空气 / 40 Micron Filtered Air								
动作方式/Motion Pattern	直动式 / Direct Drive Type								
有效截面积/ Effective Sectional Area	10mm²(CV=0.56)	14mm²(CV=0.78)	16mm²(CV=0.89)	14mm²(CV=0.78)	16mm²(CV=0.89)	25mm²(CV=1.40)	30mm²(CV=1.68)	25mm²(CV=1.40)	30mm²(CV=1.68)
接口口径 / Port size	进气=出气=排气=G1/8" Inlet,Outlet,Exhaust Post=G1/8"		进气=出气=G1/4" 排气=G1/8" Inlet,Outlet=G1/4" Exhaust Post=G1/8"	进气=出气=排气=G1/8" Inlet,Outlet, Exhaust Post=G1/8"	进气=出气=排气=G1/4" Inlet,Outlet, Exhaust Post=G1/4"	进气=出气=排气=G1/4" Inlet,Outlet, Exhaust Post=G1/4"	进气=出气=G3/8" 排气=G1/4" Inlet,Outlet=G3/8" Exhaust Post=G1/4"	进气=出气=排气=G1/4" Inlet,Outlet, Exhaust Post=G1/4"	进气=出气=排气=G3/8" Inlet,Outlet, Exhaust Post =G3/8"
使用压力范围 /Working-Pressure Range	0~0.8MPa								
使用温度范围 /Operating Temperature Range	0~60℃								
位通数/ Position Number	二位五通 5/2 Way			二位三通 3/2 Way		二位五通 5/2 Way		二位三通 3/2 Way	

外形尺寸/Overall Dimension

4R210-08

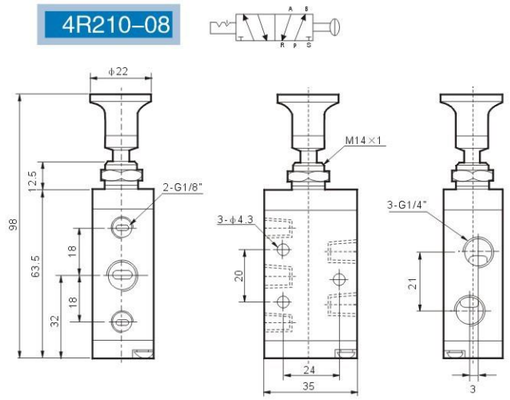

3R210-08

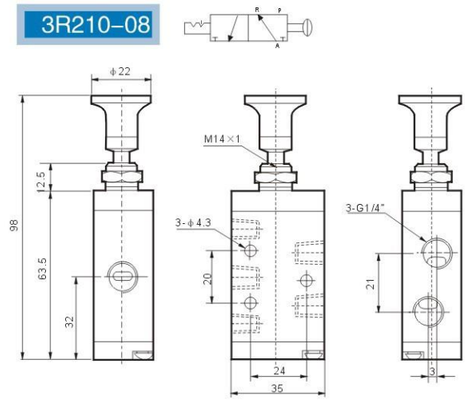

TSV-200

TSV-500

订购码/Ordering Code

TSV	–	200
规格代码 Specifcation Code TSV:手转阀 TSV:Hand-switching Valve		系列代号 Series No. 200:PT1/4 300:PT3/8 400:PT1/2 500:PT3/4

图形符号/Graphic Symbol

三位置中间排气
Three Position Middle Exhaust

三位置中间关闭
Three Position Middle Close

二位置
Two Position

规格/Specifcation

型号 Model	TSV-200		TSV-300			TSV-400			
接管口径代号 Joint Pipe Code	6A	8A	8A	10A	15A	8A	10A	15A	20A
使用流体 Operating Fluid	空气/Air								
使用压力范围 Working-pressure Range	0～10Kgf/cm								
环境温度 Environment Temperature	-5～60℃								
方口数 Way NO.	4								
接口口径 Joint Pipe Bore	PT1/8	PT1/4	PT1/4	PT3/8	PT1/2	PT1/4	PT3/8	PT1/2	PT3/4

外形尺寸/Overall Dimension

TSV-200

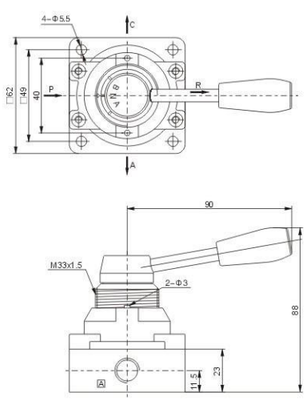

TSV-300

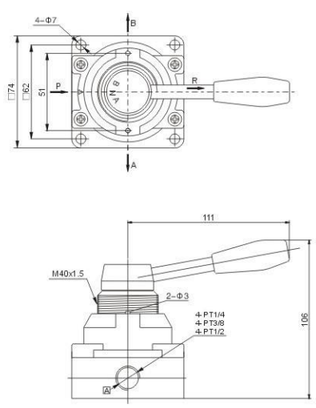

TSV-400

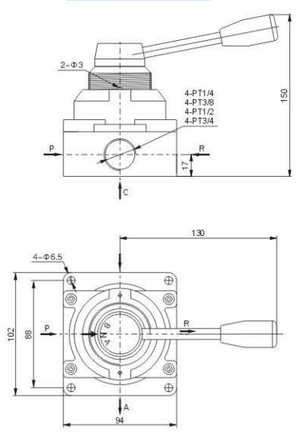

HV-402

K34R$_8$-L8D

K34R$_8$-L8

K34R$_6$-L8

订购码/Ordering Code

HV	400	–	02	B	K	34	–	R$_8$	L8	D
规格代码 手转阀 Specifcation Code Hand-switching Valve	系列号 Series NO.		接口口径 Joint Pipe Bore 02: G1/4" 03: G3/8" 04: G1/2"	接管形式 空白：管接式 B：板接式 Joint Pipe Type Blank: Pipe Connection Type B: Plate Connection Type	规格代码 手转阀 Specifcation Code Hand-switching Valve	位通数 24:二位四通 34:三位四通 Position and Way NO. 24:Two-position Four-way 34:Three-position Four-way		形式代号 R$_8$:手转阀 Type Code R$_8$:Hand-switching Valve	接口口径 Joint Pipe Bore L6: G1/8" L8: G1/4"	底部接口 Base Joint

规格/Specifcation

Model	HV400-02	HV400-03	HV400-04	K34R$_6$-L6	K34R$_6$-L8
工作介质 Working Medium	40 Micron Filtered Air				
有效截面积 Effective Sectional Atea	30mm^2(cv+1.68)			18mm^2(cv+1.00)	
接管口径 Port Size	G1/4"	G3/8"	G1/2"	G1/8"	G1/4"
使用压力范围 Working-pressure Range	0~0.8MPa				
使用温度范围 Operating Temperature Range	0~60℃				

* 公司可提供密封结构形式为橡胶软密封和陶瓷硬密封的手转阀。
* Company can offer Hand-switching Valve with soft rubber seals and hard pottery seals as the seal structure form.

外形尺寸/Overall Dimension

HV400

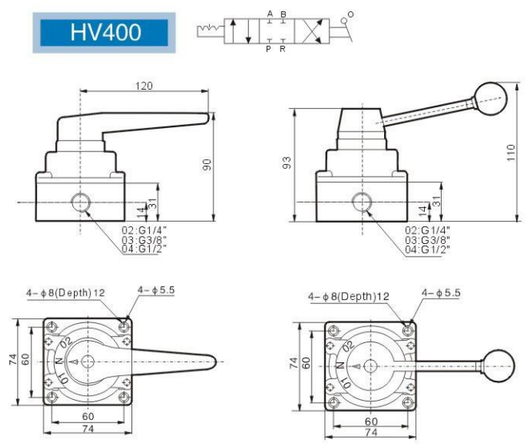

K34R$_8$-L8

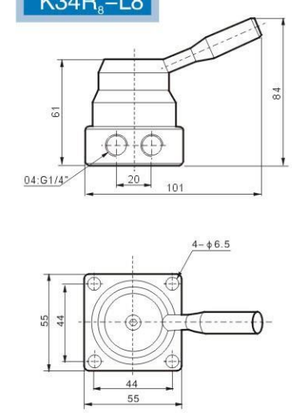

4H210-08

4H310-10

4H410-15

订购码/Ordering Code

4H – 2 – 10 – 06 – L

4H — 规格代码
4H:二(三)位五通
Specifcation Code
4H: Two(Three)-position Five-way

2 — 系列代号/Series Code
2:200系列 Series
3: 300系列 Series
4: 400系列 Series

10 — 位置数
10: 单头双位置
30: 单头三位置
Number of places
10: Single-head Double-position
30: Single-head Three-position

06 — 接口口径
Joint Pipe Bore
06:G1/8"
08: G1/4"
10: G3/8"
15: G1/2"

L — 形式代号
空白: 三位五通复位型
L: 三位五通锁型
Type Code
Blank:Three-position Five-way Reset Type
L:Three-position Five-way Locking Type

规格/Specifcation

型号/Model	4H210-06	4H210-08	4H230-08	4H310-08	4H310-10	4H330-10	4H410-15	4H430-15
工作介质 / Working Medium	经40微米过滤的空气 / 40 Micron Filtered Air							
动作方式 / Motion Pattern	直动式 / Direct Drive							
有效截面积 / Effective Sectional Area	14mm²(CV=0.78)	16mm²(CV=0.89)	12mm²(CV=0.67)	25mm²(CV=1.4)	30mm²(CV=1.68)	18mm²(CV=1.00)	50mm²(CV=2.79)	30mm²(CV=1.68)
接口口径/Port size	进气=出气=排气=G1/8" Inlet,Outlet, Exhaust Post=G1/8"	进气=出气=G1/4" 排气=G1/8" Inlet,Outlet=G1/4" Exhaust Post=G1/8"	进气=排气=出气=G1/4" Inlet,Outlet, Exhaust Post=G1/4"	进气=排气=出气=G1/4" Inlet,Outlet, Exhaust Post=G1/4"	进气=出气=G3/8" 排气=G1/4" Inlet,Outlet=G3/8" Exhaust Post=G1/4"		进气=出气=排气=G1/2" Inlet,Outlet,Exhaust Post=G1/4"	
使用压力范围/Working Pressure Range	0~0.8MPa							
使用温度范围/Operating Temperature Range	0~60℃							

外形尺寸/Overall Dimension

4H Series

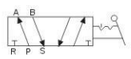

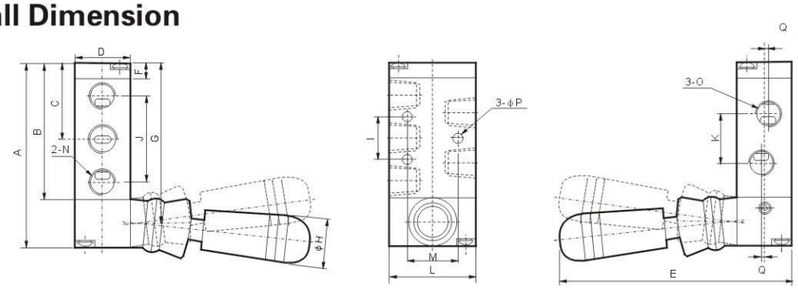

符号/型号 Symbol/Model	A	B	C	D	E	F	G	H	I	J	K	L	M	N	O	P	Q
4H210-08(06)	76	56.5	31.5	22	95	6.5	66.5	18	20	36	21	35	21	G1/8"	G1/8"	4.3	-
4H230-08(06)-L	76	56.5	31.5	22	95	6.5	66.5	18	20	36	21	35	21	G1/8"	G1/8"	4.3	-
4H230-08(06)-S(自动复位/Automatic Rebound)	95	75.5	31.5	22	95	6.5	85.5	18	20	36	21	35	21	G1/8"	G1/8"	4.3	-
4H310-10(08)	76	56.5	31.5	22	95	6.5	66.5	18	20	36	21	35	21	G1/8"	G1/4"	4.3	1.5
4H330-10(08)-L	76	56.5	31.5	22	95	6.5	66.5	18	20	36	21	35	21	G1/8"	G1/4"	4.3	1.5
4H330-10(08)-S(自动复位/Automatic Rebound)	95	75.5	31.5	22	95	6.5	85.5	18	20	36	21	35	21	G1/8"	G1/4"	4.3	1.5
4H410-15	92	72.5	40	27	100	7.5	82.5	18	24	45	24	40	27	G1/4"	G1/4"	4.3	-
4H430-15-L	92	72.5	40	27	100	7.5	52.5	18	24	45	24	40	27	G1/4"	G3/8"	4.3	2
4H430-15-S(自动复位/Automatic Rebound)	126	102	55.5	34	100	7.5	114	18	28	63	36	50	35	G1/2"	G1/2"	5.5	-

TSV86522-M

TSV86522-C

TSV98322-M

订购码/Ordering Code

TSV86 – 52 – 2 – M

TSV86 — 规格代码
手扳阀
Specifcation Code
Hand-pull Valve

52 — 位通数
二位五通
Position and Way NO.
Two-position Five-way

2 — 口径代号
Bore Code
1:G1/8"
2: G1/4"

M — 形式代号
M:机械锁定式
S:弹簧复位式
C:三位五通中封型
Type Code
M:Machinery Locking Type
S:Spring Reset Type
C:Three-position Five way Center Close Down Type

TSV98 – 32 – 2 – M

TSV98 — 规格代码
手扳阀
Specifcation Code
Hand-pull Valve

32 — 位通数
二位三通
Position and Way NO.
Two-position Three-way

2 — 口径代号
Bore Code
1:G1/8"
2: G1/4"

M — 形式代号
M:机械锁定式
S:弹簧复位式
Type Code
M:Machinery Locking Type
S:Spring Reset Type

规格/Specifcation

型号 Model	TSV86522 M/S	TSV98322 M/S
工作介质 Working Medium	经40um滤网过滤 / 40Micron Filtered	
动作方式 Motion Pattern	直动式 / Direct Drive Type	
有效截面积 Effective Sectional Area	18mm²(CV=1.00)	
接管口径 Joint Pipe Bore	G1/4"	
使用压力范围 Working Pressure Range	0~0.8MPa	
使用温度范围 Operating Temperature Range	0~60℃	

外形尺寸/Overall Dimension

TSV86522

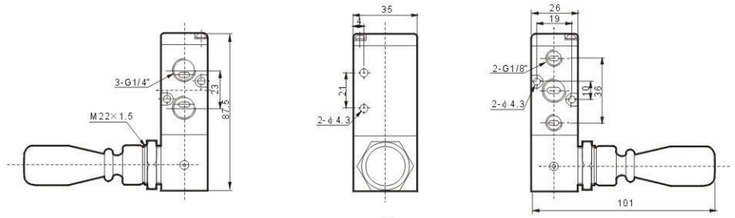

TSV98322

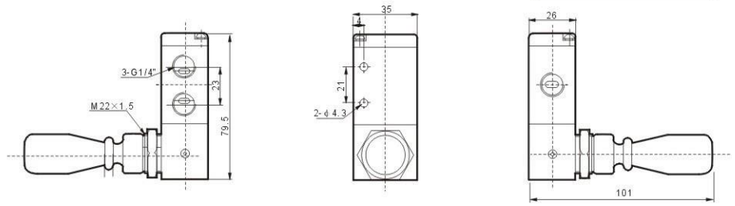


SV-01


ASC-06


ASC-08


ASC-10


ASC-15


SV-02


RE-01


RE-02


RE-03


RE-04

订购码/Ordering Code

ASC – 08

系列代码
ASC：精密型流量控制阀
Series Code
ASC: Accurate Type Flow Control Valve

接管口径
Joint Pipe Bore
06: G1/8"
08: G1/4"
10: G3/8"
15: G1/2"

RE – 01

系列代码
RE：普通型流量控制阀
Series Code
RE: Ordinary Type Flow Control Valve

接管口径
Joint Pipe Bore
01: G1/8"
02: G1/4"
03: G3/8"
04: G1/2"

图形符号/Graphic Symbol

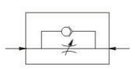

规格/Specifcation

型 号 Model	精密型 Accurate Type						普通型 Ordinary Type			
	SV-01	SV-02	ASC-06	ASC-08	ASC-10	ASC-15	RE-01	RE-02	RE-03	RE-04
接管口径 Joint Pipe Bore	G1/8"	G1/4"	G1/8"	G1/4"	G3/8"	G1/2"	G1/8"	G1/4"	G3/8"	G1/2"
工作介质 Working Medium	空气 / Air									
使用压力范围 Working Pressure Range	0～0.95MPa									
使用温度范围 Operating Temperature Range	0～60°C									

外形尺寸/Overall Dimension

ASC-08B

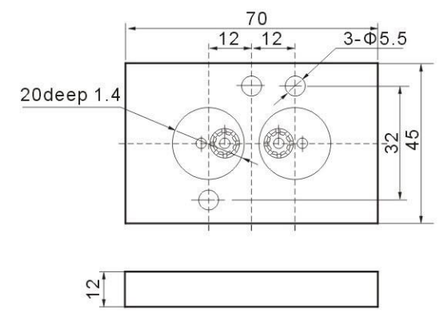

SV、ASC

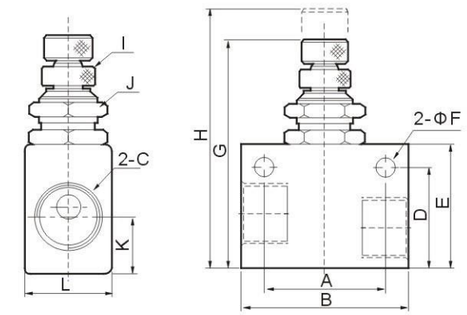

尺寸表/Dimension Sheet

型号 / 符号 Model	A	B	C	D	E	F	G	H	I	J	K	L
ASC-06	22	32	G1/8	22	27	4.3	49.7	56.5	M6×0.5	M12×0.75	12	18
ASC-08	26	36	G1/4	22	27	4.3	49.7	56.5	M6×0.5	M12×0.75	12	18
ASC-10	28	40	G3/8	25	30	4.3	52.7	59.5	M6×0.5	M12×0.75	13	22
ASC-15	28	40	G1/2	30	35	4.3	58.7	65.5	M6×0.5	M12×0.75	13.5	26

外形尺寸/Overall Dimension

RE Series

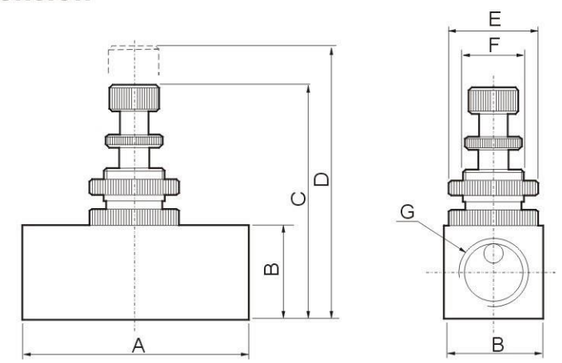

尺寸表/Dimension Sheet

型号 / 符号 Model	A	B	C	D	E	F	G
RE-01	45	19	43	50	Φ19	M14×1	G1/8
RE-02	45	19	43	50	Φ19	M14×1	G1/4
RE-03	55	25	55	62	Φ25	M18×1	G3/8
RE-04	55	25	55	62	Φ25	M18×1	G1/2

订购码/Ordering Code

AS — 系列代号/Series Code
AS: 大流量硬密封节流阀
AS: Series Large Flow Check Valve

1000 — 口径代号 Bore Code
1000: G1/8"
2000: G1/4"
3000: G3/8"
4000: G1/2"

图形符号/Graphic Symbol

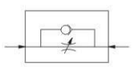

外形尺寸/Overall Dimension

AS4000

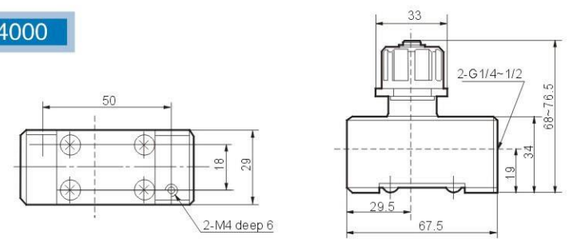

规格/Specifcation

型号/Model		AS1000-M5	AS2000-01	AS2000-02	AS3000-02	AS3000-03	AS4000-02	AS4000-03	AS4000-04
接管口径/Port Size		M5	G1/8"	G1/4"	G1/4"	G3/8"	G1/4"	G3/8"	G1/2"
无压流动/Free Flow	流量/Flow(L/min)	90	340		810		1670		
	有效截面积/Effective Sectional Area(mm²)	1.4	5.2		12.3		25.5		
控制流/Controlled Flow	流量/Flow(L/min)	80	250		810		1670		
	有效截面积/Effective Sectional Area(mm²)	1.2	3.8		12.3		25.5		
保证耐压力/Ensured Pressure Resistance		1.05MPa	1.5MPa						
最高使用压力/Highest Working Pressure		0.7MPa	1.0MPa						
最低使用压力/Lowest Working Pressure		0.1MPa	0.05MPa						
环境与介质温度/Ambient and Media Temperature		5~60℃							
调整流量转数/Regulated Flow Turnsq		10	8~9						
重量/Weight(g)		33	90	115	130		205		

注*：AS2000为9转，AS3000、AS4000为8转。Note*：9 turns for AS2000,8 turns for AS3000 and AS4000.

KA系列 & ACV系列单向阀/KA Series & ACV Series Check Valve

订购码/Ordering Code

KA — 系列/Series
KA系列
KA Series

15 — 接口口径 Joint Pipe Bore
06:G1/8"
08:G1/4"
10: G3/8"
15: G1/2"
20:G3/4"
25:1"

ACV — 系列/Series
ACV系列
ACV Series

01 — 接口口径 Joint Pipe Bore
01:G1/8"
02:G1/4"
03: G3/8"
04: G1/2"

DGP-1 DGP-2 DGP-3 DGP-4

该阀是一种二位三通手动滑阀，常接在管道中用作气源开关，当气源关闭的同时，气动系统中的气压亦即排空。

This valve is a two-position three-way sliding valve, which is usually installed in the piping to turn on/off airs. When it is turned off, the air pressure in the pneumatic system is exhausted simultaneously.

图形符号/Graphic Symbol

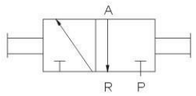

规格/Specifcation

型号/Model	DGP-1	DGP-2	DGP-3	DGP-4	DGP-5
接管口径/Port Size	G1/8"	G1/4"	G3/8"	G1/2"	G3/4"
通径/Orifice Size	4mm	7mm	10mm	12mm	18mm
工作介质/Working Medium	经过滤的压缩空气/Filtered and Compressed Air				
工作压力/Working Pressure	0~1.0MPa				
环境温度/Ambient Temperature	5~60℃				
操作力/Operating Force	20N				30N

外形尺寸/Overall Dimension

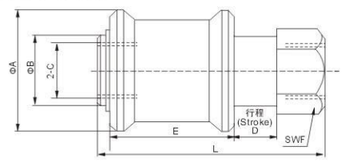

尺寸表/Dimension Sheet

型号/符号 Model / Symbol	A	B	C	D	E	F	L
HSV-01	25	13	G1/8	9	28	14	48
HSV-02	30	18	G1/4	11	32	19	58
HSV-03	35	21	G3/8	14	39	22	68
HSV-01	40	26	G1/2	15	45	27	80

梭 阀 / Mechanical Valve

订购码/Ordering Code

ST — 系列代码
ST：梭阀
Series Code
ST: Shuttle Valve

–

01 — 接管口径 / Joint Pipe Bore
01: G1/8" 02: G1/4" 03: G3/8"
04: G1/2" 06: G3/4" 08: G1"

图形符号/Graphic Symbol

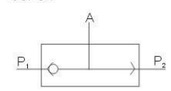

规格/Specifcation

型 号 Model	ST-01	ST-02	ST-03	ST-04	ST-06	ST-08
工作介质 Working Medium	空气 / Air					
有效截面积 Effective Sectional Area	7.5mm²	21mm²	40mm²	60mm²	110mm²	190mm²
接管口径 Joint Pipe Bore	G1/8"	G1/4"	G3/8"	G1/2"	G3/4"	G1"
使用压力范围 Working Pressure Range	0～0.8MPa					
使用温度范围 Operating Temperature Range	0～60°C					

外形尺寸/Overall Dimension

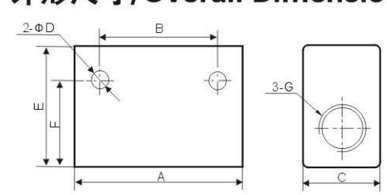

尺寸表/Dimension Sheet

Model	A	B	C	D	E	F	G
ST-01	40	24	16	4.5	25	20.5	G1/8"
ST-02	50	35	22	5.5	35	25	G1/4"
ST-03	75	48	30	7	50	42	G3/8"
ST-04	75	48	30	7	50	42	G1/2"
ST-06	110	72	40	7	70	58	G3/4"
ST-08	110	72	40	7	70	58	G1"

QE-01

QE-02

DQE-06

DQE-15

订购码/Ordering Code

QE – 01

系列代码 / Series Code
QE：快速排气阀
QE: Quick Exhaust Valve

接管口径 / Joint Pipe Bore
01: G1/8" 02: G1/4" 03: G3/8"
04: G1/2" 06: G3/4"

DQE – 06

系列代码
Series Code
QE：快速排气阀
QE: Quick Exhaust Valve

接管口径
Joint Pipe Bore
06: G1/8"
08: G1/4"
10: G3/8"
15: G1/2"

图形符号/Graphic Symbol

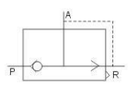

规格/Specifcation

型 号 Model	QE-01	QE-02	QE-03	QE-04	QE-06
工作介质 Working Medium	空气 / Air				
有效截面积 Effective Sectional Area	16mm²	27.5mm²	28mm²	71mm²	72.5mm²
接管口径 Joint Pipe Bore	G1/8"	G1/4"	G3/8"	G1/2"	G3/4"
使用压力范围 Working Pressure Range	0 ~ 0.8MPa				
使用温度范围 Operating Temperature Range	0 ~ 60°C				

外形尺寸/Overall Dimension

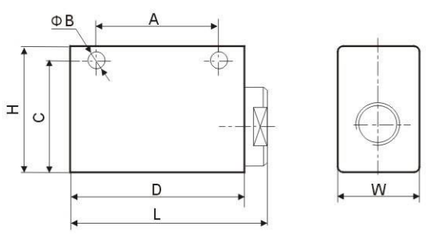

尺寸表/Dimension Sheet

Model	Bore	L	W	H	A	B	C	D
QE-01	G1/8"	46	20	32	30	4.3	27	40
QE-02	G1/4"	62	25	40	39	5.6	33.5	55
QE-03	G3/8"	62	25	40	39	5.6	33.5	55
QE-04	G1/2"	98	38	64	60	8.5	51	90
QE-06	G3/4"	98	38	64	60	8.5	51	90

该系列高压二位三通换向阀采用截止式结构,具有性能可靠,使用压力高,安全可靠,使用寿命长等特点,已广泛、成熟地应用于吹瓶机等高压气动系统中，尤其适用于大容量，特殊形状聚脂瓶的生产设备中

This series high-pressure two-position & three-port change valve adopts stop type structure, With the characteristics of reliable performance, high pressure and safety, and long service life .It has been widely and maturely especially applied to the high-pressure pneumatic system such as bottle blower. It is especially applied to the prosecution equipment of large-volume polyester bottle in special shape.

订购码/Ordering Code

DH23J D – 8 P2

规格代码
Specifcation Code
二位三通高压截止式
换向阀
Two-position Three-way
high pressure solenoid valve

控制方式
Control Type
D:单电控
QGA:气缸控制
D:Single control
QGA:Cylinder control

接管口径
Joint Pipe Size
8:G1/4 (M12x1.25)
15:G1/2 (M20x1.5)

引导方式
空白: 内部先导
P_2: 外部先导
Blank: Inside piolt type
POutside piolt type

图形符号/Graphic Symbol

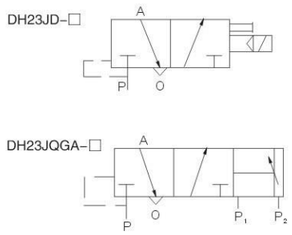

规格/Specifcation

订货代号 / Order Code / 参 数 / Parameter	DH23JQGA-8 DH23JD-8P2 DH23JD-8	DH23JD-15 DH23JD-15P2 DH23JQGA-15
公称通径 Orifce(mm)	8	15
工作压力 Working Pressure(Mpa)	0.15 ~ 2.4	
换向时间 Change times(S)	≤0.04	≤0.08
有效截面积Effective Sectional Area(mm²)	≥20	≥60
环境温度Environment Temperature(℃)	-10 ~ 55	
介质温度 Medium Temperature(℃)	-5 ~ 50	
寿命万次 Life/Ten Thousand Times	≥150	

外形尺寸/Overall Dimension

DH23JD-8

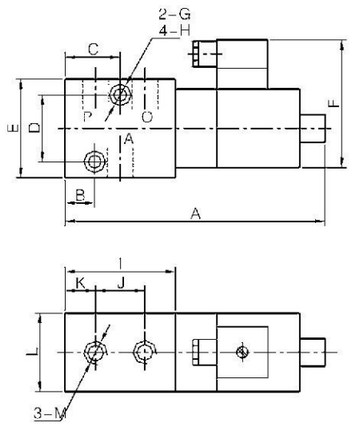

DH23JD-8P$_2$

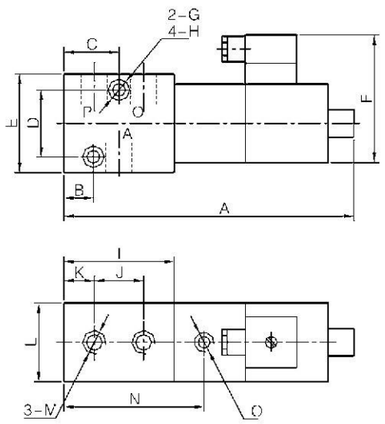

型 号Model	接管螺纹 M Joint Screw	A	B	C	D	E	F	G	H	I	J	K	L	N	O
DH23JD-8	G1/4	132	15	28	35	50	65	7	11	56	26	15	40	–	–
DH23JD-8P$_2$	G1/4	145												75	G1/8

DH23JD-15

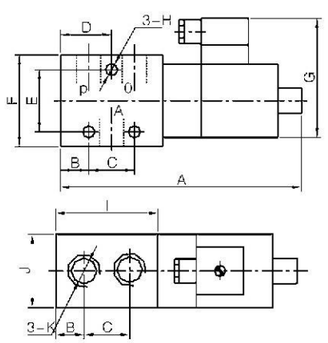

DH23JD-15P$_2$

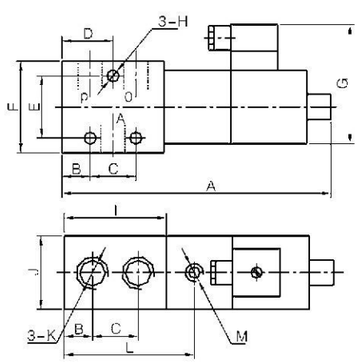

型 号Model	接管螺纹 M Joint Screw	A	B	C	D	E	F	G	H	I	J	N	O
DH23JD-15	G1/2	140	15	35	32.5	40	60	65	7	65	40	–	–
DH23JD-15P$_2$	G1/2	157										84.5	G1/8


2630600


2630700


8020750
8022750


8021750


8020850
8022850


2636000


2636200


2637050


2637250

订购码/Ordering Code

263 — 系列代码
二位五通滑柱式电磁阀
Series Code
Two-postion Five-way pillar type solenoid valves

6000 — 通 径
"6000""6200"表示通径为6mm；其中"6000"表示单电，"6200"表示双电，"7050""7250"表示通径为12mm，其中"7050"表示单电，"7250"表示双电
Orifce
"6000""6200"express that latus rectum is 6mm; and "6200" expresses the single electricity, "6200"expresses the double electricity; "7050"7250"express that latus rectum is 12mm, and "7050" is the single electricity, "7250" is the double electricity.

802 — 系列代码
二位四通滑柱式电磁阀
Series Code
Two-postion Four-way pillar type solenoid valves

□□ — 常 通
"60"表示单电，"70"表示双电，通径均为4mm
Often Passes
"60"expresses the single electricity, "70"expresses the double electricity,

0 — 排 气 式
"0"表示直接排气式；"1"表示底板引出排气式
Exhaust Type
"0"expresses direct exhaust type; "1"expresses soleplate drawing-out exhaust type

2630 — 系列代码
二位三通滑柱式电磁阀
Series Code
Two-postion Three-way pillar type solenoid valves

□ — 常 通
"0"表示单电，"4"表示双电，"2"表示长通，
Often Passes
"0"expresses the single electricity, "1"expresses the double electricity, "2"expresses often passes

□□□ — 通 径
"750"表示通径为6mm；"850"、"950"表示通径为12mm
Orifce
"750"express that latus rectum is 6mm; "850"、"950" express that latus rectum is 12mm;

图形符号/Graphic Symbol

2636000/2637050

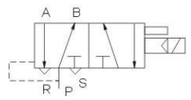

2636200/2637250

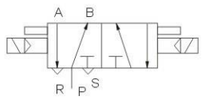

2630600/2630601

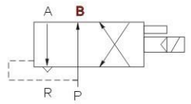

2630700/2630701

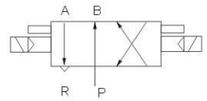

8020750/8020850

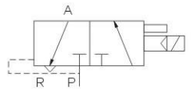

8022750/8022850

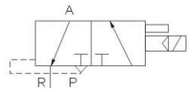

8021750/8021950

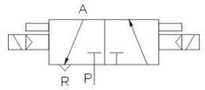

订购码/Ordering Code

MCF – 25 AC220V

- MCF系列 / MCF Series
- 接管口径 / Joint Pipe Size
  - 25:ZG1"
  - 40:ZG1-1/2"
  - 50:ZG2"
  - 65:ZG2-1/2"
- 标准电压 / Standard Voltage
  - AC110V
  - AC220V
  - AC380V
  - DC24V

产品说明 / Product Explaination

该阀(隔膜阀)是脉冲袋式除尘器清灰喷吹系统的压缩空气“开关”，受脉冲喷吹控制仪输出信号的控制，对逐排室滤袋喷吹清灰，保证除灰尘器的处理能力和吸尘效率。

This valve(disk valve)is a kind of compression air "Switch" for blast cleaning system of pulse pocket type dust catcher and is controlled by the output signal from pulse blast controller. It blast cleans the filter bag line (pocket by pocket) and ensure the cleaning capacity and dust absorption efficiency of dust catcher.

规格/Specifcation

型号 Model	MCF-25	MCF-40	MCF-50	MCF-65
阀体材质 Material of Body	铝合金/Aluminum Alloy			
动作方式 Motion Pattern	膜片引导式/Diaphragm Pilot			
接管口径 Port connection	ZG1"	ZG1-1/2"	ZG2"	ZG2-1/2
压力范围 Pressure Range	0.05~1.5MPa			
使用温度 Applicable Temperature	-5~60℃			
额定电压 Rating Voltage	AC12V、AC24V、AC36V、AC110V、AC220V、AC380V；DC12V、DC24V、DC110V			
允许电压范围 Operating Voltage Range	± 10%			
最短励磁时间 Min.Activating Time	0.05S			

外形尺寸/Overall Dimension

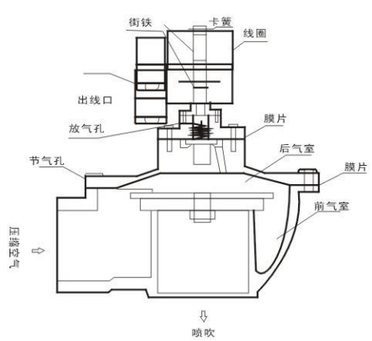

安装方法/Installation Method

电磁脉冲阀输入端（IN）与储气筒金属管相连接，其输出端也除尘箱喷吹管连接，连接螺纹均填以四氟乙烯生料带紧固密封。

Solenoid pulse valve input (in) is connected to the metal pipe of air storage cylinder, and its output is connected to the blast pipe of the dust pocket. Between the con-nect screw thread is flled with tetrafuoroethylene tape for seal.

尺寸表/Dimension Sheet

型号 Model	接管口径 Port connection	长度mm (Length)	宽度mm (Width)	高度mm (Helght)
MCF-25	ZG1"	110	85	125
MCF-40	ZG1-1/2"	140	125	170
MCF-50	ZG2"	210	190	200
MCF-65	ZG2-1/2"	210	190	225

订购码/Ordering Code

DMF – 25 AC220V

- DMF系列 / DMF Series
- 接管口径 / Joint Pipe Size
  - 50:ZG2"
  - 62:ZG2-1/2"
  - 76:ZG3"
- 标准电压 / Standard Voltage
  - AC110V
  - AC220V
  - AC380V
  - DC24V

产品说明 / Product Explaination

该电磁脉冲阀为淹没式阀(亦称嵌入式阀)它直接安装在气包上，具有更好的直通喷吹，工作气源损失较小，适用于气源压力范围较宽的场合。

This solenoid pulse valve is a flood type valve(also called inset valve).It is directly installed on the air bag with good straight blast and less loss of working air source. It is applied to the situation with wide range of air source pressure .

规格/Specifcation

型号 Model	DMF-50	DMF-62	DMF-76
阀体材质 Material of Body	铝合金 / Aluminum Alloy		
动作方式 Motion Pattern	膜片引导式 / Film Pilot		
接管口径 Joint Pipe Bore	ZG2"	ZG2-1/2"	ZG3"
压力范围 Pressure Range	0.05~1.5MPa		
使用温度 Applicable Temperature	-5~60℃		
额定电压 Rating Voltage	AC12V、AC24V、AC36V、AC110V、AC220V、AC380V；DC12V、DC24V、DC110V		
允许电压范围 Operating Voltage Range	± 10%		
最短励磁时间 Min.Activating Time	0.05S		

外形尺寸/Overall Dimension

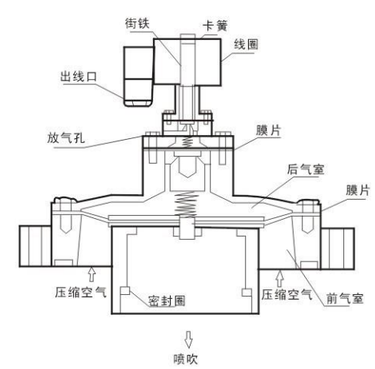

尺寸表/Dimension Sheet

型号 Model	接管口径 Port connection	长度mm (Length)	宽度mm (Width)	高度mm (Helght)
DMF-50	ZG2"	250	250	210
DMF-62	ZG2-1/2"	230	230	200
DMF-76	ZG3"	210	190	200

图形符号/Graphic Symbol

常闭/Normal Close　　常开/Normal Open

订购码/Ordering Code

2W 025 – 06 NO – AC110V – E

规格代码
2W: 二位二通电磁阀（直动式）
2WH: 二位二通电磁阀（高压直动式）
2S: 不锈钢二位二通电磁阀（直动式）
2SH: 不锈钢二位二通电磁阀(高压直动式)
Specifcation Code
2W: Two position two way solenoid valve(direct drive type)
2WH: Two position two way solenoid valve(high pressure direct drive type)
2S: Stainless steel two position two way s olenoid valve(direct drive type)
2SH: Stainless steel two position two way solenoid valve(high pressure direct drive type)

流量孔径
Aperture of Flow Rate
012: 1.2mm
020: 2.0mm
025: 2.5mm
040: 4.0mm

接管口径
Joint Pipe Bore
06:1/8"
08: 1/4"
10: 3/8"

初始状态
空白: 常闭型
NO: 常开型
Initial Estate
Blank: Normal Close
NO: Normal Open

标准电压
Standard Voltage
DC12V
DC24V
AC24V 50/60Hz
AC36V 50/60Hz
AC110V 50/60Hz
AC220V 50/60Hz
AC380V 50/60Hz

油封代号
空白: NBR
V: VITON(高温用)
E: EPDM (蒸汽用)
Oil Seal Code
Blank: NBR
V: VITON(for high–temperature)
E:EPDM (for steam)

规格/Specifcation

型 号 Model	2W025-06	2W025-08	2W040-10	2WH012-06	2WH012-08	2WH020-10
	2S025-06	2S025-08	2S040-10	2SH012-06	2SH012-08	2SH020-10
工作介质/Working Medium	空气、水、油、瓦斯 / Air, Water, Oil, Gas					
作动方式/Operation	直动式 / Direct Acting					
型式/Acting Type	常闭型 / Normal Close Type；常开型 / Normal Open Type					
流量孔径mm/Orifice Size(mm)	2.5		4	1.2		2
CV值/CV Value	0.23		0.60	0.05		0.15
接管口径/Port Size	G1/8"	G1/4"	G3/8"	G1/8"	G1/4"	G3/8"
使用流体粘滞度/Operation Fluid Viscosity	20 CST以下 (Below)					
使用压力/Operating Pressure	空气、水、油、瓦斯 / Air, Water, Oil, Gas: 0～0.7Mpa			空气、水、油、瓦斯 / Air, Water, Oil, Gas: 0～2.0MPa		
最大耐压力/Max. Pressure Resistance	1.0MPa			3.5MPa		
工作温度/Operating Temperature	-5～80°C(更改密封件温度能达到5~150°C)/NBR for-5~80°C and VITON for -5~80°C					
使用电压范围/Voltage Range	±10%					
本体材质/Material of Boby	2W: 黄铜 Brass； 2S: 不锈钢 Stainless Steel					
油封材质/Material of Oil Seal	NBR, EPDM 或 VITON / NBR, EPDM or VITON					

*特殊电压及特殊规格请与厂方接洽 / Please contact Factory for special voltage and Specifcation.

外形尺寸/Overall Dimension

2W025–06

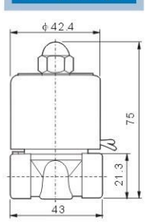

2WH012–06

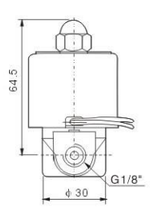

2W025–08

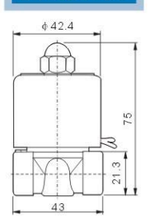

2WH012–08

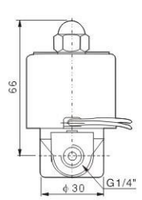

2W040–10

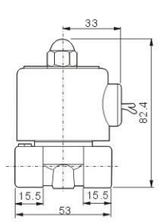

2WH020–10

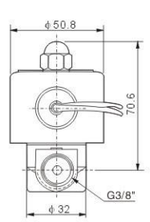

图形符号/Graphic Symbol

常闭/Normal Close　　常开/Normal Open

订购码/Ordering Code

2W 160 – 15 NO – AC110V – V

规格代码
2W：二位二通电磁阀（直动式）
2S：不锈钢二位二通电磁阀（直动式）
Specifcation Code
2W:two position two way solenoid valve(direct drive type)
2S:stainless steel two position two way solenoid valve(direct drive type)

流量孔径
Aperture of Flow Rate
160: 16mm
200: 20mm
250: 25mm
350: 35mm
400: 40mm
500: 50mm

接管口径
Joint Pipe Bore
10:3/8"
15: 1/2"
20: 3/4"
25: 1"
35: 1–1/4"
40: 1–1/2"
50: 2"

初始状态
空白：常闭型
NO：常开型
Initial Estate
Blank: Normal Close
NO:Normal Open

标准电压
Standard Voltage
DC12V
DC24V
AC24V 50Hz/60Hz
AC36V 50Hz/60Hz
AC110V 50Hz/60Hz
AC220V 50Hz/60Hz
AC380V 50Hz/60Hz

油封代号
空白：NBR
V:VITON (高温用)
Oil Seal Code
Blank: NBR
V: VITON
(for high–temperature)

规格/Specifcation

型 号 Model	2W160–10	2W160–15	2W200–20	2W250–25	2W350–35	2W400–40	2W500–50
	2S160–10	2S160–15	2S200–20	2S250–25	2S350–35	2S400–40	2S500–50
工作介质/Working Medium	空气、水、油、瓦斯 / Air, Water, Oil, Gas						
作动方式/Operation	直动式 / Direct Acting						
型式/Acting Type	常闭型 / Normal Close Type；常开型 / Normal Open Type						
流量孔径mm/Orifice Size(mm)	16	16	20	25	35	40	50
CV值/CV Value	4.8	4.8	7.6	12	24	29	48
接管口径/Port Size	G3/8"	G1/2"	G3/4"	G1"	G1–1/4"	G1–1/2"	G 2
使用流体粘滞度/Operation Fluid Viscosity	20 CST以下 (Below)						
使用压力/Operating Pressure	水 Water : 0～0.5MPa; 空气 Air : 0～0.7MPa; 油 Oil : 0～0.5MPa; 瓦斯 Gas : 0～0.7MPa						
最大耐压力/Max. Pressure Resistance	1.05MPa						
工作温度/Operating Temperature	-5～80°C(更改密封件温度能达到5~150°C)/NBR for-5~80°C and VITON for -5~80°C						
使用电压范围/Voltage Range	±10%						
本体材质/Material of Boby	2W: 黄铜 Brass； 2S: 不锈钢 Stainless Steel						
油封材质/Material of Oil Seal	NBR, EPDM 或 VITON / NBR, EPDM or VITON						

*特殊电压及特殊规格请与厂方接洽 / Please contact Factory for special voltage and Specifcation.

外形尺寸/Overall Dimension

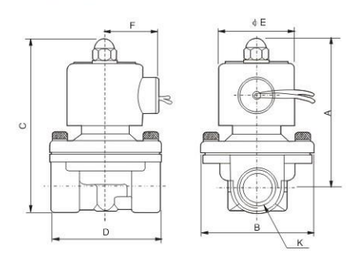

尺寸表/Dimension Sheet

型 号 Model	A	B	C	D	E	F	K
2W160–10	101.5	57	117	69	50	36	G3/8
2W160–15	101.5	57	117	69	50	36	G1/2
2W200–20	107	57	123.5	73	50	36	G3/4
2W250–25	111.5	73.5	134.5	99	50	36	G1
2W350–35	142	95	172	123	70.5	56	G1–1/4
2W400–40	142	95	172	123	70.5	56	G1–1/2
2W500–50	172	123	209	168	70.5	56	G2

订购码/Ordering Code

23 – 06 – AC220V

位通数
22:二位二通
23:二位三通
Position and Way NO.
22:Two-position Two-way
23:Two-position Three- way

接管口径
Joint Pipe Bore
06: 1/8″
08: 1/4″

标准电压
Standard Voltage
DC12V DC24V
AC24V 50Hz/60Hz
AC110V 50Hz/60Hz
AC220V 50Hz/60Hz
AC380V 50Hz/60Hz

图形符号/Graphic Symbol

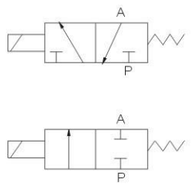

规格/Specifcation

型号/Model	DL22-06		DL22-08		DL23-06	DL23-08
工作介质/Working Medium	空气、水、蒸汽/Air, Water, Steam				空气 / Air	
流量孔径/Aperture of Flow Rate(mm)	1.6	2.4	3.2	4.0	1.6	
CV值/CV Value	0.1	0.21	0.33	0.43	0.1	
接管口径/Port Size	G1/8"		G1/4"		G1/8"	G1/4"
使用压力范围/Working-pressure	0~1.5MPa	0~1.0MPa	0~0.7MPa	0~0.5MPa	0~0.9MPa	
使用电压范围/Voltage Range	±10%					
油封材质/Material of Oil Seal	NBR或VITON / NBR or VITON					

*特殊电压及特殊规格请与厂方接洽 / Please contact Factory for special voltage and Specifcation.

外形尺寸/Overall Dimension

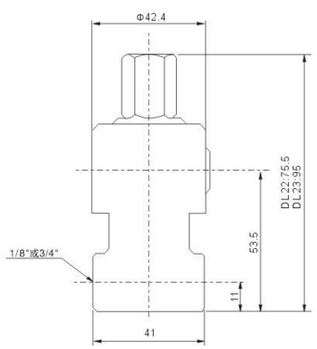

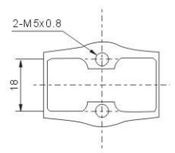

订购码/Ordering Code

2L – 170 – 15 – AC110V

规格代码
2L:蒸汽型二位二通电磁阀
Specifcation Code
2L: Steaml type Two-position Two-way Solenoid Valve

流量孔径
Aperture of Flow Rate
170: 17mm
200: 22mm
300: 30mm
500: 50mm

接管口径
Joint Pipe Bore
10:3/8" 35: 1-1/4"
15: 1/2" 40: 1-1/2"
20: 3/4" 50: 2"
25: 1"

标准电压
Standard Voltage
DC12V DC24V
AC24V 50Hz/60Hz
AC36V 50Hz/60Hz
AC110V 50Hz/60Hz
AC220V 50Hz/60Hz
AC380V 50Hz/60Hz

图形符号/Graphic Symbol

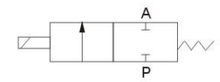

规格/Specifcation

型号/Model	2L170-10	2L170-15	2L170-20	2L200-25	2L300-35	2L300-40	2L500-50
工作介质/Working Medium	空气、水、蒸汽/Air, Water, Steam						
动作方式/Motion Pattern	先导式/Guide Type						
型式/Type	常闭型/Normal Close Type						
流量孔径/Aperture of Flow Rate(mm)	17			22	30		50
CV值/CV Value	4.8			12	20		48
接管口径/Port Size	G3/8"	G1/2"	G3/4"	G1"	G1 1/4"	G1 1/2"	G2"
使用流体粘滞度/Operation Fluid Viscosity	20 CST以下(Below)						
使用压力/Working-pressure	空气、水、蒸汽/Air,Water,Steam: 0.1~1.5MPa						
最大耐压力/Max. Pressure Resistance	1.5MPa						
工作温度/Operating Temperature Range	-5~+180℃						
使用电压范围/Voltage Range	±10%						
本体材质/Material of Body	黄铜/Brass						
油封材质/Material of Oil Seal	PTFE						

外形尺寸/Overall Dimension

2L Series

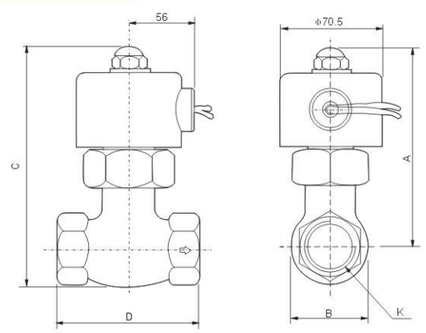

尺寸表/Dimension Sheet

型号/Model	A	B	C	D	K
2L170-10	125	38	146	76	G3/8"
2L170-15	125	42	146	81	G1/2"
2L170-20	125	47	146	84	G3/4"
2L200-25	136	54	162	91.5	G1"
2L300-35	148	76	185	111	G1 1/4"
2L300-40	148	76	185	111	G1 1/2"
2L500-50	178	88	223	164	G2"

订购码/Ordering Code

2V	025	–	06	–	AC110V
规格代码 2V:二位二通电磁阀 Specifcation Code 2V: Two-position Two-way Solenoid Valve	流量孔径 Aperture of Flow Rate 025: 2.5mm 130: 13mm 250: 25mm		接管口径 Joint Pipe Bore 06: 1/8″ 08: 1/4″ 10: 3/8″ 15: 1/2″ 20: 3/4″ 25: 1″		标准电压 Standard Voltage DC12V DC24V AC24V 50Hz/60Hz AC110V 50Hz/60Hz AC220V 50Hz/60Hz AC380V 50Hz/60Hz

图形符号/Graphic Symbol

规格/Specifcation

型号/Model	2V010-M4	2V025-06	2V025-08	2V130-10	2V130-15	2V250-20	2V250-25
工作介质 Working Medium	空气、水、油 / Air,Water,Oil						
动作方式 Motion Pattern	直动式/Direct Drive Type			先导式/Guide Type			
型式 Type	常闭型/Normal Close Type						
流量孔径 mm Aperture of Flow Rate(mm)	1.0	2.5		13		25	
CV值 CV Value	0.10	0.23		6.2		23	
接管口径 Port Size	M4×0.7	G1/8"	G1/4"	G3/8"	G1/2"	G3/4"	G1"
使用流体粘滞度 Operation Fluid Viscosity	20 CST (Below)						
使用压力 MPa Working Pressure	空气、水、油 /Air,Water,Oil 0.05~0.7MPa						
最大耐压力 MPa Max. Pressure Resistance	1.2	1.6		1.0			
工作温度℃ Operating Temperature Range	-10~+80℃						
使用电压范围 Voltage Range	±10%						
保护等级 Protect Class	IP65						
耗电量 Power Consumption	AC:4.5VA DC:3W						
绝缘性 Insulation	F级/F Class						
本体材质 Material of Body	铝或铜(镀镍处理)/Aluminum or Brass (Nickel coated)			黄铜/Brass			
油封材质 Material of Oil Seal	NBR或VITON/NBR or VITON			NBR或VITON /NBR or VITON			
最短励磁时间 Shortest Excitation Time	0.05 秒 /0.05 Second						

*特殊电压及特殊规格请与厂方接洽 / Please contact Factory for special voltage and Specifcation.

2V Series Two – Position
Two – Way Solenoid Valve

外形尺寸/Overall Dimension

2V010–M4

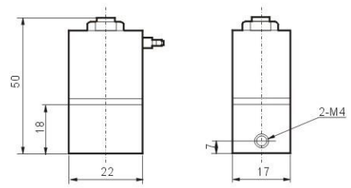

2V025–06 2V025–08

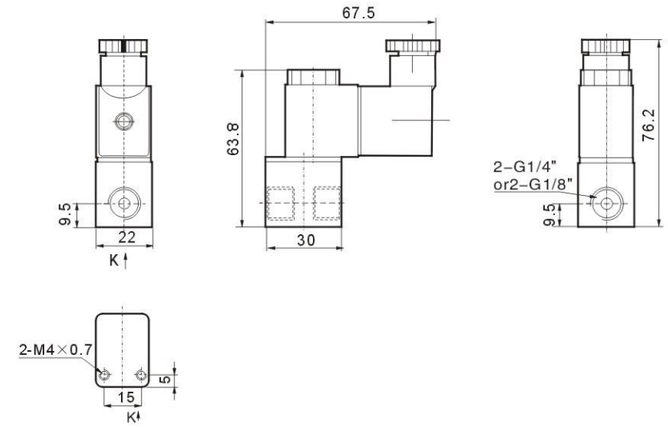

2V130–10
2V130–15

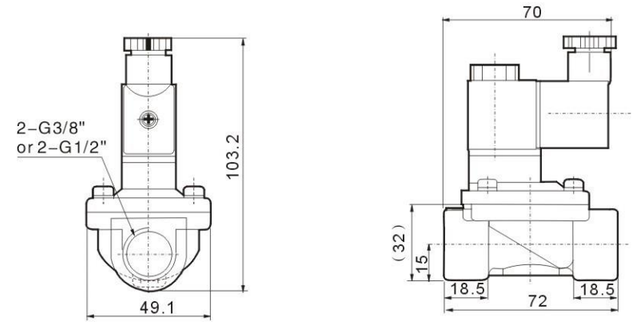

2V250–20
2V250–25

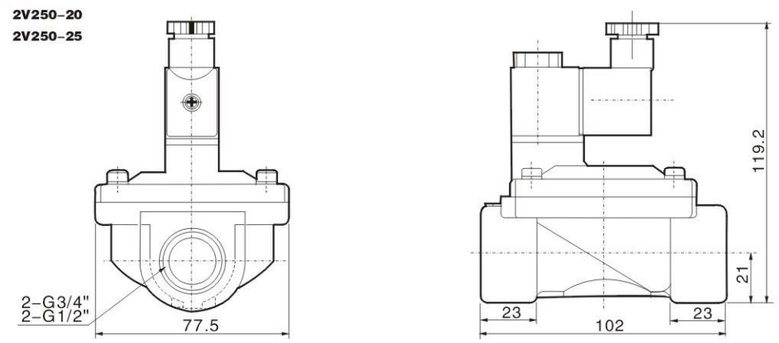

订购码/Ordering Code

2P – 025 – 06 A – AC110V

规格代码
2P:二位二通电磁阀 (塑钢型)
Specifcation Code
2P: Two-position Two-way Solenoid Valve (Reinforced plastic steel type)

流量孔径
Aperture of Flow Rate
025: 2.5mm

接管口径
Joint Pipe Bore
06: 1/8"
08: 1/4"

设计序列号
空白：基本型
A：A序列
Design Sequence NO.
Blank:Normal
A:A Sequence

标准电压
Standard Voltage
DC12V DC24V
AC24V 50Hz/60Hz
AC110V 50Hz/60Hz
AC220V 50Hz/60Hz
AC380V 50Hz/60Hz

图形符号/Graphic Symbol

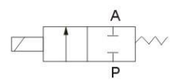

规格/Specifcation

型号/Model	2V010-M4	2V025-06	2V025-08	2V130-10
工作介质 Working Medium	空气、水、油、瓦斯 / Air, Water, Oil, Gas			
动作方式 Motion Pattern	直动式/Direct Drive Type			
型式 Type	常闭型/Normal Close Type			
流量孔径 mm Aperture of Flow Rate(mm)	2.5			
CV值 CV Value	0.23			
接管口径 Port Size	G1/8"	G1/4"	G1/8"	G3/4"
使用流体粘滞度 Operation Fluid Viscosity	20 CST 以下(Below)			
使用压力 MPa Working Pressure	0~0.7MPa			
最大耐压力 MPa Max. Pressure Resistance	-5~+80℃			
工作温度℃ Operating Temperature Range	±10%			
使用电压范围 Voltage Range	工程塑料 / Engineering Plastic			
耗电量 Power Consumption	AC:7VA/50Hz, 9VA/50Hz ; DC:6W		AC:5VA/50Hz ; DC:5.5W	
本体材质 Material of Body	NBR, EPDM或VITON / NBR, EPDM or VITON			

*特殊电压及特殊规格请与厂方接洽 / Please contact Factory for special voltage and Specifcation.

外形尺寸/Overall Dimension

2P Series

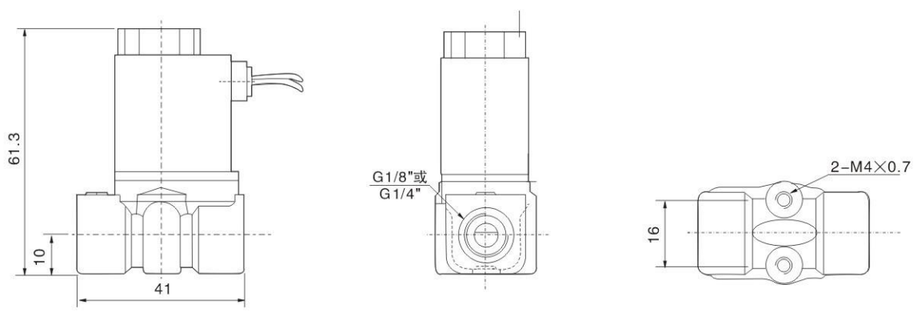

订购码/Ordering Code

PU – 220 – 01 – AC110V – E

规格代码
PU:二位二通电磁阀
Specifcation Code
PU: Two-position Two-way Solenoid Valve

动作方式
220: 直动式
225:先导式
Motion Pattern
200:Direct drive type
225:Guid Type

接管口径
Joint Pipe Bore
01: 1/8" 08: 1"
02: 1/4" 12: 1-1/4"
03: 3/8" 14: 1-1/2"
04: 1/2" 20: 2"
06: 3/4"

标准电压
Standard Voltage
DC12V
DC24V
AC24V 50Hz/60Hz
AC110V 50Hz/60Hz
AC220V 50Hz/60Hz
AC380V 50Hz/60Hz

油封代号
空白：NBR
E:EPDM
V:VITON
Oil Seal Code
Blank: NBR
E: EPDM
V: VITON

图形符号/Graphic Symbol

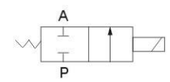

规格/Specifcation

型号/Model	PU220-01	PU220-02	PU220-03	PU220-04	PU220-06	PU220-08
工作介质 Working Medium	空气、水、油 / Air,Water,Oil					
动作方式 Motion Pattern	220:直动式/Direct Drive Type / 225:先导式/Guide Type					
型式 Type	常闭型/Normal Close Type					
流量孔径 mm Aperture of Flow Rate(mm)	1.5	2.3	8	13	20	25
CV值 CV Value	0.10	0.18	1.00	4.00	8.60	11.00
接管口径 Port Size	G1/8"	G1/4"	G3/8"	G1/2"	G3/4"	G1"
使用流体粘滞度 Operation Fluid Viscosity	50 CST (Below)					
使用压力 MPa Working Pressure	空气、水、油 /Air,Water,Oil 0~0.7MPa					
最大耐压力 MPa Max. Pressure Resistance	1.5					
工作温度℃ Operating Temperature Range	-5~+80℃					

*特殊电压及特殊规格请与厂方接洽 / Please contact Factory for special voltage and Specifcation.

外形尺寸/Overall Dimension

PU Series

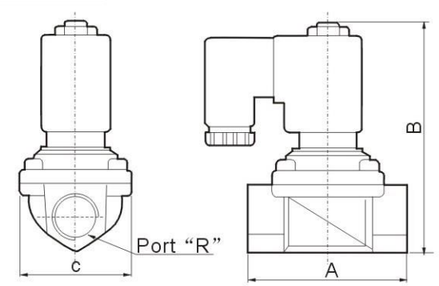

尺寸表/Dimension Sheet

型号/Model	口径 Bore	A	B	C
PU220-01	G3/8"	22	72	22
PU220-02	G1/4"	35	75.5	25.4
PU220-03	G3/8"	55	79.5	30
PU220-04	G1/2"	66.5	101	48
PU220-06	G3/4"	71	107	48
PU220-08	G1"	96	120	70

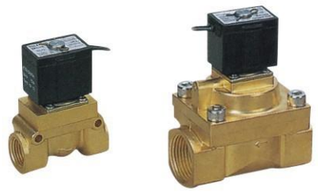

订购码/Ordering Code

5404 – 04 – AC110V

型号
Model

接管口径
Joint Pipe Bore
04: 1/2"
06: 3/4"
08: 1"

标准电压 / Standard Voltage
DC12V DC24V
AC24V 50Hz/60Hz
AC110V 50Hz/60Hz
AC220V 50Hz/60Hz
AC380V 50Hz/60Hz

图形符号/Graphic Symbol

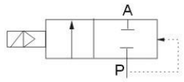

规格/Specifcation

型号/Model	DL5404-04	DL5404-06	DL5404-08
工作介质/Working Medium	空气、水、油、瓦斯/Air, Water, Oil, Gas		
动作方式/Motion Pattern	直动式 / Direct Drive Type		
型式/Type	常闭型/Normal Close Type		
流量孔径/Aperture of Flow Rate(mm)	12	20	25
KV值/KV Value	2.0	5.0	10.0
接管口径/Joint Pipe Bore	G1/2"	G3/4"	G1"
使用压力/Working-pressure(kgf/cm²)	气体/Gas: 0.1 ~ 5MPa, 液体/Liguid: 0.1 ~ 5MPa	气体/Gas: 0.1 ~ 4MPa, 液体/Liguid: 0.1 ~ 2.5MPa	气体/Gas: 0.1 ~ 4MPa, 液体/Liguid: 0.1 ~ 2.5MPa
最大耐压力/Max. Pressure Resistance(kgf/cm²)	75	60	
使用温度范围/Operating Temperature Range(℃)	-5~+150℃		
使用电压范围/Voltage Range	±10%		
保护等级Protect Class	IP65		
耗电量/Power Consumption	AC:5.5VA DC:9W		
绝缘性/Insulation	F级/F Class		
本体材质/Material of Body	黄铜/Brass		
油封材质/aterial of Oil Seal	聚四氟乙烯 PTFE		

特殊电压及特殊规格请与厂方接洽 / Please contact Factory for special voltage and Specifcation.

外形尺寸/Overall Dimension

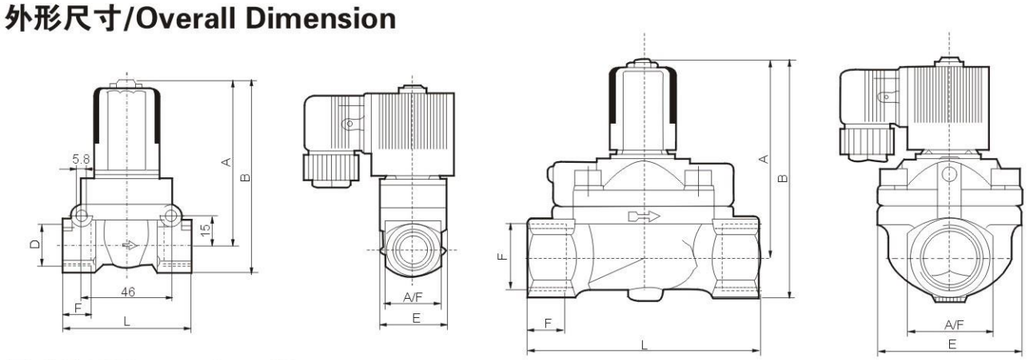

尺寸表/Dimension Sheet

型号/Model	深Bore(mm)	Port	A	B	F	E	L	A/F
DL5404-04	12.0	G1/2"	83.0	95.5	14	32	65	27
DL5404-06	20.0	G3/4"	93.0	109.0	16	60	100	32
DL5404-08	25.0	G1"	99.5	119.0	18	70	115	40

订购码/Ordering Code

2Q – 200 – 25

规格代码
2Q：二位二通气控阀
Specifcation Code
2Q: two position two way Air Control valve

流量孔径
Aperture of Flow Rate
200:22mm
350:35mm
500:50mm

接管口径
Joint Pipe Bore
25: 1"
40: 1 1/2"
50: 2"

图形符号/Graphic Symbol

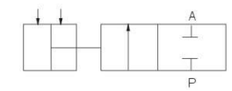

规格/Specifcation

型号/Model	DL-2Q200-25	DL-2Q350-40	DL-2Q500-50
工作介质/Working Medium	空气、水、油 / Air，Water，Oil		
动作方式/Motion Pattern	直动式 / Direct Drive Type		
流量孔径/Aperture of Flow Rate(mm)	22	35	50
Cv值/Cv Value	12	24	48
接管口径/Joint Pipe Bore	G1"	G1 1/2"	G2"
使用介质粘滞度/Operation Fluid Viscosity	50 CST 以下 / Below 50 CST		
使用压力范围/Working Pressure Rang	0~0.7MPa		
最大耐压力/Max. Pressure Resistance	1.05MPa		
控制压力范围/Control Pressure Range	0.3~0.6MPa		
工作温度范围/Operating Temperature Rang	-5~100℃		
本体材质/Material of Body	黄铜/Brass		
密封材质/Material of Oil Seal	聚四氟乙烯/PTFE		
控制接管口径/Control Joint Pipe Bore	2-G1/8"	2-G1/4"	2-G1/4"

*特殊电压及特殊规格请与厂方接洽 / Please contact Factory for special voltage and Specifcation.

外形尺寸/Overall Dimension

2Q Series

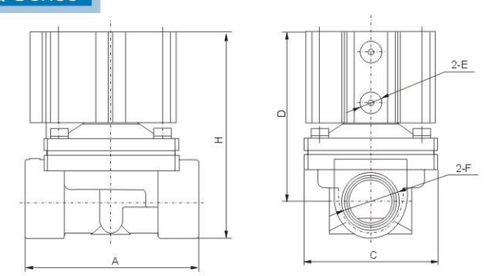

尺寸表/Dimension Sheet

型号 Model	DL-2Q200-25	DL-2Q350-40	DL-2Q500-50
A	99	123	170
H	116	146	155
C	57	95	118
D	95	116	114
E	1/8"	1/4"	1/4"
F	1"	1 1/2"	2"

订购码/Ordering Code

VX2120	–	08	–	AC220V
规格代码 Specifcation Code		接管口径 Joint Pipe Bore 06: 1/8" 08: 1/4" 10: 3/8" 15: 1/2"		标准电压 Standard Voltage DC12V DC24V AC24V 50Hz/60Hz AC110V 50Hz/60Hz AC220V 50Hz/60Hz AC380V 50Hz/60Hz

图形符号/Graphic Symbol

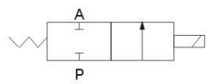

规格/Specifcation

型号/Model	VX2120–06	VX2120–08	VX2120–10	VX2120–15
工作介质/Working Medium	空气、水、蒸汽/Air, Water, Steam			
动作方式/Motion Pattern	直动式/Direct Drive Type			
型式/Type	常闭型/Normal Close Type			
使用压力/Working–pressure	0~1.0MPa			
流量孔径/Aperture of Flow Rate(mm)	3		13	
接管口径/Port Size	G1/8"	G1/4"	G3/8"	G1/2"
使用温度范围/Operating Temperature Range	–5~+150℃		–5~+80℃	
油封材质/Material of Oil Seal	VITON		NBR	

*特殊电压及特殊规格请与厂方接洽 / Please contact Factory for special voltage and Specifcation.

外形尺寸/Overall Dimension

VX Series

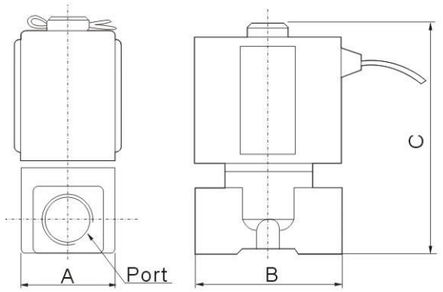

尺寸表/Dimension Sheet

型号 Model	口径 Port Size	A	B	C
VX2120-06	1/8	25	40	64
VX2120-08	1/4	25	40	64
VX2120-10	3/8	48	68	110
VX2130-15	1/2	48	68	110

订购码/Ordering Code

23	–	06	–	AC220V
位通数 22: 二位二通 23: 二位三通 Position and Way NO. 22: Two–position Two–way 23: Two–position Three– way		接管口径 Joint Pipe Bore 06: 1/8" 08: 1/4"		标准电压 Standard Voltage DC12V DC24V AC24V 50Hz/60Hz AC110V 50Hz/60Hz AC220V 50Hz/60Hz AC380V 50Hz/60Hz

电磁阀线圈 / Valves Coils

US线圈/US Coil

线圈孔径、高度：Φ23x55
适用功率及电压：
AC 28VA 24–380V
DC 24W 24–380V
Coil aperture,Height:Φ23x55
Applicable power and Voltage:
AC 28VA 24–380V
DC 24W 24–380V

2W系列线圈/2W Series Coil

线圈孔径、高度：Φ16x37
适用功率及电压：
AC 18VA 24–380V
DC 12W 24–380V
Coil aperture,Height:Φ16x37
Applicable power and Voltage:
AC 18VA 24–380V
DC 24W 12–380V

2W02线圈/2W025 Coil

线圈孔径、高度：Φ14x31
适用功率及电压：
AC 14VA 24–380V
DC 9W 6–380V
Coil aperture,Height:Φ14x31
Applicable power and Voltage:
AC 14VA 24–380V
DC 9W 6–380V

QX系列线圈/QX Series Coil

线圈孔径、高度：Φ13.5x26
适用功率及电压：
AC 15VA 24V–380V
DC 12W 6V–220V
Coil aperture, Height:Φ13.5x26
Applicable power and Voltage:
AC 15VA 24V–380V
DC 12W 6V–220V

防爆线圈/Explosion–proof Coil

线圈孔径、高度：Φ13x43
适用功率及电压：
AC 12VA 24V–220V
DC 11W 12V–220V
Coil aperture, Height:Φ13x43
Applicable power and Voltage:
AC 12VA 24V–220V
DC 11W 12V–220V

VX系列线圈/VX Series Coil

线圈孔径、高度：Φ11x35
适用功率及电压：
AC 13VA 12–380V
DC 8W 6–380V
Coil aperture,Height:Φ11x35
Applicable power and Voltage:
AC 13VA 12–380V
DC 8W 6–380V

防水线圈/Waterproof Coil

线圈孔径、高度：Φ16xΦ43
适用功率及电压：
AC 22VA 220–110V
DC 18W 24V
Coil aperture, Height:Φ16x43
Applicable power and Voltage:
AC 22VA 220–110V
DC 18W 24V

4V210系列线圈/4V210 Series Coil

适用功率及电压：
AC 4.2~8.5VA
DC 3~ 8W
Coil aperture, Height:Φ16x38
Applicable power and Voltage:
AC 4.2~8.5VA
DC 3~ 8W

2P025线圈/2P025 Coil

线圈孔径、高度：Φ 9x29.5
适用功率及电压：
AC 8VA 12V–220V
DC 6W 6V–110V
Coil aperture, Height:Φ 9x29.5
Applicable power and Voltage:
AC 8VA 12V–220V
DC 6W 6V–110V

4V110系列线圈/4V110 Series Coil Coil

适用功率及电压：
AC 5VA 110–220V
DC 2.8W 12–24V
Applicable power and Voltage:
AC 5VA 110–220V
DC 2.8W 12–24V

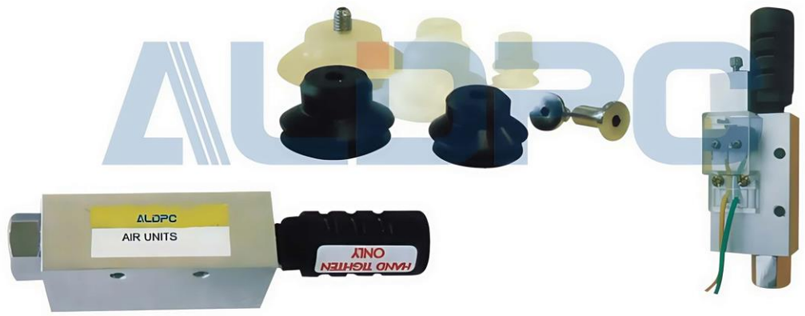

订购码/Ordering Code

150 – C – K

喷嘴口径 Nozzle Diameter	附开关 With Switch	附可调式 With Adjustable Type
05: 0.5mm	空白: 标准型	空白: 标准型
10: 1.0mm	C: 附微动开关	K: 附可调式
15: 1.5mm	Blank: Standard type	Blank: Standard type
20: 2.0mm	C: With micro-switch	K: With adjustable type

规格/Specifcation

型 号 Model	DL-050	DL-100	DL-150	DL-200
使用流体 Operating Fluid	空气 / Air			
使用温度范围 Range of Operating Temperature	0~60℃			
给油 Lubrication	不要 / No			
使用压力范围 Working-pressure Range	0.1 ~ 1.6 (1.0 ~ 6.0kgf/cm²)			
喷嘴直径 Nozzle Diameter (mm)	Φ0.5	Φ1.0	Φ1.5	Φ2.0
到达真空度 Max. Vacuum Value	-91.8kpa (-680mmHg)			
接管口径 Joint Pipe Bore	M5	1/8PT	1/4PT	3/4PT

真空信号确认装置(附开关及调整)Vacuum Signal Confrmation Device(With Switch and Adjustable)

型 号 Model	C 固定型 C Fixed Type	CK 可调整型 CK Adjustable Type
约定范围 Setting Range	-39.9(-300mmHg)	-20.0~-53.2(-150~-400mmHg)
出荷时定值 Setting Value Before Operational (kpa)	-39.9(-300mmHg)	-46.6(-350mmHg)
动作精度 Accuracy	±5.3 (±-40mmHg)	
感应差 Hysteresis	4.0~13.3 (30~100mmHg)	
电器规格 Electrical Rating (When resistance is applied)	AC125V:5A, AC250V:3A	
使用温度范围 Range of Operating Temperature	0~60℃	

真空产生器(标准型)Standard Type

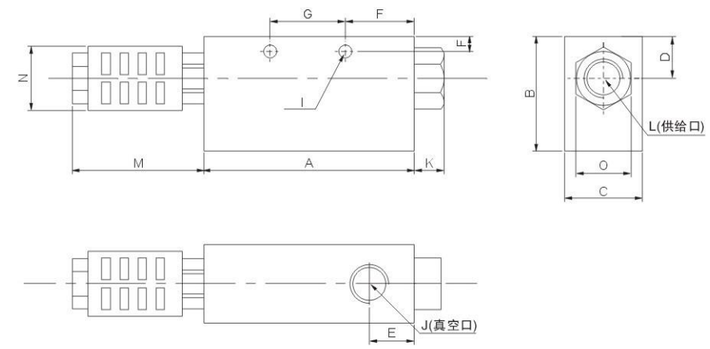

真空产生器(附检知型)Switch and Adjustable

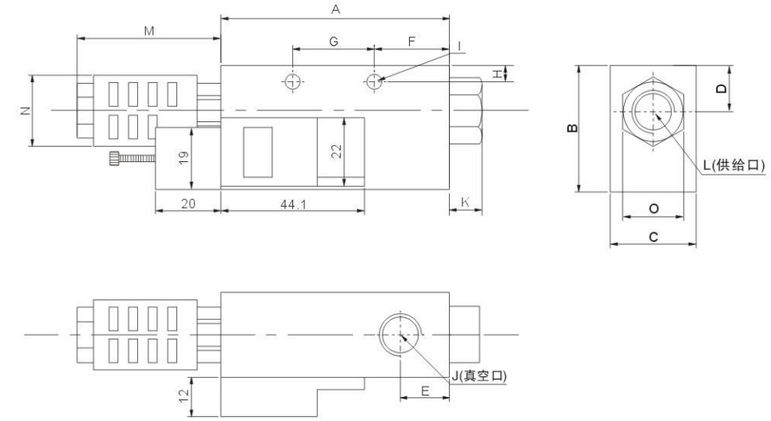

尺寸表/Dimension Sheet

型 号 Model	A	B	C	D	E	F	G	H	I	J	K	L	M	N(Φ)	O	消音器
DL-050(CK)	50	32	16	11	12	19	20	4.5	2-Φ4.2	Rp1/8	5	Rp1/8	44	21.5	14	Rp1/8
DL-100(CK)	50	32	16	11	12	19	20	4.5	2-Φ4.2	Rp1/8	5	Rp1/8	44	21.5	14	Rp1/8
DL-150	70	38	26	13	15	23	25	5	2-Φ4.5	Rp1/4	10	Rp1/4	44	21.5	17	Rp1/4
DL-150(CK)	63	38.5	19.5	11	10.5	20	25	5.5	2-Φ6	Rp1/4	15	Rp3/8	44	21	17	Rp1/2
DL-200(CK)	96	38	30	16	22	32	32	6.5	2-Φ6	Rp3/8	10	Rp1/4	55	28	23.5	Rp1/2
DL-250	100	60	40	20	16	20	50	5.5	2-Φ6	Rp1/2	17	Rp3/8	71	40	28	Rp3/4
DL-300	118	60	40	20	20	33	50	5.5	2-Φ6	Rp3/4	20	Rp1/2	71	40	30	Rp3/4

＊型号CK为附检知真空产生器。